Emergency Fixtures

Drench Showers
Eye and Eye/Face Washes
Combination Drench Shower Eye and Eye/Face Washes
Enclosed Safety Showers
Tankless Tempering Systems
Navigator Skid Systems
Emergency Signaling Systems
Drench Hoses
Laboratory Fixtures
Emergency Thermostatic Mixing Valves
Portable Eyewashes

Bradley®

BRADLEYCORP.COM

Table of Contents

What's New

Stainless Steel Fixtures with Halo

Pages 20, 25-26, 28-29, 40-43

See Classic Model vs Halo Cross Reference on page 100 or on bradleycorp.com

Halo® Heat Trace Shower and Eye/Face Wash

Pages 46-48

Keltech® Tankless Skid Systems

Pages 53

Emergency Signaling Systems

Pages 56-58

Laboratory Eye & Eye/Face Washes with Halo

Pages 68–71, 74, 75

New ANSI Quick Compliance Guide booklet available! Download at

http://bit.do/Bradley-ANSI-Guide

Standard Products

Drench Showers

Freestanding 8

Quick Compliance Guide 9

Horizontal 11

Vertical 13

Eye & Eye/Face Washes

Pedestal-mounted 15

Quick Compliance Guide 16

S19214 Series Configurator 22

Wall-mounted 23

S19224 Series Configurator 31

Combination Drench Showers

Shower with Eyewash, Eye/Face Wash or Eye/Face Spray Ring 32

Quick Compliance Guide 33

S19314 Series Configurator 45

Heat Trace 46

S19304 Series Configurator 48

Enclosed Safety Showers

Indoor and Outdoor Models 49

Quick Compliance Guide 51

Keltech Tankless Heaters

Tankless Tempering Systems 52

Emergency Thermostatic Mixing Valves

Thermostatic Mixing Valves 54

Navigator Skid Systems 55

Emergency Signaling Systems

Signaling Systems 56

Flow Switches 59

S19324 Series Configurator 60

S19324D1 Series Configurator 61

S19324D2 Series Configurator 62

Drench Hoses

Drench Hoses 63

Quick Compliance Guide 64

Deck-mounted 65

Wall-mounted 65

Back-flow Preventers 66

Plumbed Laboratory Safety Solutions

Deck- and Wall-mounted Eye and Eye/Face Washes 67

Swing-activated Eye and Eye & Eye/Face Washes 69

Quick Compliance Guide 70

Recessed Drench Showers, Eye and Eye/Face Washes 73

Portable Safety Solutions

On-Site® Portable Gravity-Fed Eyewashes 79

Quick Compliance Guide 80

Portable Pressurized Eyewashes 82

Accessories

Portable Eyewash Accessories 84

Drench Hose Spray Kits 84

Privacy Curtain and Drench Shower Tester 84

Emergency Signaling Systems 85

Freeze and Scald Protection Valves 86

Retrofit Classic Dust Covers 91

Replacement Parts: Spintec and Drench Showers

Handles 91

Retrofit Kits 92

Ball Valves 92

Hoses, Guide Brackets, Spray Valve 93

Back-flow Prevention 93

Replacement Parts: Other

On-Site Water Eyewash Kit 94

On-Site Foam Liner 94

On-Site Gravity Fed Tank 94

Safety Signs 94

Safety Yellow Paint 94

Inspection Tag 94

Eyewash Test Gauge 94

Foot Treadle Kits 95

Adapters 95

Standard Specifications 96

Halo vs Classic Cross Reference 100

Halo Certification Reference 102

Numerical Index 106

Barrier Free

Drench Showers

Freestanding

S19-110BF 10

S19-110BFSS, S19-110BFSSZ 10

Horizontal Mounted

S19-120BF 13

S19-120ABF 13

S19-120SSBF, S19-120SSBFZ 13

S19-120FMBF 13

Vertical Mounted

S19-130BF 14

S19-130ABF 14

S19-130SSBF, S19-130SSBFZ 14

Recess Mounted

S19-125BF 74

S19-125FMBF 74

S19-125SBF 74

S19-125SFMBF 74

Eye & Eye/Face Washes

Pedestal Mounted

All Halo Models 17

S19214 Series Configurator 22

Wall Mounted

All Halo Models 24

S19224 Series Configurator 31

Swing Activated

S19274HDB 71

S19274HWB 71

S19-280D 71

S19-280W 71

S19274JDB 72

S19274JWB 72

S19-290D 72

S19-290W 72

Cabinet Concealed, Swing Activated

S19284HB 75

S19284JB 75

S19294HB 76

S19294HBT 76

S19294JB 76

S19294JBT 76

Combination Drench Shower and Eye & Eye/Face Washes

S19314BFPB, S19314BFPBZ 39

S19314BFPBZS 39

S19314BF, S19314BFZ 39

S19314BFZS 40

S19314DCBF, S19314DCBFZ 41

S19314DCBFZS 41

S19314BFSS, S19314BFSSZ 42

S19314 Series Configurator 45

Recessed, Swing Activated

S19345HXB 77

S19345HXBT 77

S19345HFB 77

S19345HFBT 77

S19345JXB 77

S19345JXBT 77

S19345JFB 77

S19345JFBT 77

FROST PROOF

Drench Showers (Through Wall)

S19-120HFP Series 12

Eye & Eye/Face Washes (Through Wall)

S19-220HFP Series 29

Combination Drench Shower and Eye & Eye/Face Washes

S19-310 Series 42

Heat Trace

S19-304 46

Corrosion Resistant

Drench Showers

Freestanding, Stainless Steel

S19-110SS, S19-110SSZ 10

S19-110BFSS, S19-110BFSSZ 10

Horizontal Mounted, Stainless Steel

S19-120SS, S19-120SSZ 12

S19-120SSBF, S19-120SSBFZ 13

Vertical Mounted, Stainless Steel

S19-130SS, S19-130SSZ 13

S19-130SSBF, S19-130SSBFZ 14

Eye & Eye/Face Washes

Pedestal Mounted, Stainless Steel

S19214BSS, S19214BSSZ 20

S19214SC, S19214SCZ 20

S19214SS, S19214SSZ 20

Wall Mounted, Stainless Steel

S19224SC, S19224SCZ 29

S19224SS, S19224SSZ 29

Portable Pressurized, Stainless Steel

S19-690 83

S19-690LHS 83

S19-788 83

S19-788LHS 83

Combination Drench Shower and Eye & Eye/Face Washes

Stainless Steel

S19314BFSS, S19314BFSSZ 42

S19314FSS, S19314FSSZ 42

S19314SC, S19314SCZ 42

S19314SS, S19314SSZ 43

S19314SS16, S19314SS16Z 43

Shower Accessories

Foot Treadle Kits

S45-1314SS 95

S45-1314SS16 94

BradEX®

On-Site® Eyewash Kit

S19-949 81

Eyewashes

Freestanding

S19214EW 17

Swing Activated

S19-270C 71

S19-270HD 71

S19-270HW 71

S19-270E 72

Laboratory

S19-200B 68

S19-270B 68

Gravity Fed

S19-921 81

Drench Showers

S19-120 12

S19-130 13

Combination Drench Shower and Eye & Eye/Face Washes

S19314EW 34

S19314SBFW 37

Emergency Thermostatic Mixing Valves

S19-2000 55

S19-2100 55

S19-2150 55

S19-2200 55

S19-2250 55

S19-2300 55

S19-2350 55

Fast Shipping

Bradley's ***BradEX®*** shipping program allows you to prepare for upcoming inspections and respond to changing workplace needs. Fast replacements are just a phone call away and will ship within two days. The ***BradEX®*** shipping feature is available for a wide range of product, at no extra cost.

Halo
EYE/FACEWASH

Halo™ surrounds you with the fastest, most effective relief in the industry. Bradley's new eye & eye/face wash provides the most washdown coverage for your face of any model on the market. In an emergency, your eyes and face can't afford to trust anything but the best in the industry.

1 Enhanced dust cover design in clear translucent yellow allowing for easy inspection. When the cover is opened, water flow starts automatically giving the user instant relief.

2 New ergonomic hand activation is easy to reach from any direction.

3 Separate supply waste and pipes to eye/face wash are industry first and exclusive to Bradley!

4 The Aquaduct™ design is the only selfdraining design for standard Eyewash models — another industry first and Bradley exclusive. The self-draining Aquaduct helps reduce the risk of bacteria growth when unit is not in use. Integral strainer inside the Aquaduct reduces debris in the water for additional eye protection and also prevents clogging.

5 New dust cover caps on the Eyewash are hinged for a more secure hold — keeping dust and debris off the water spouts.

Spintec™
SHOWERHEADS

SpinTec™ showerheads incorporate the latest technology in fluid dynamics and provide the most consistent distribution of water from a drench shower. That means the fastest, most effective removal of contaminants in the industry.

SpinTec Standard Showerhead

Showerhead is constructed of ABS plastic so it is highly corrosion resistant.

1 Integral flow control provides a minimum of 20GPM (761 L/Min)

2 Contoured shape focuses water for faster washdown

3 Spinning motion of water creates optimal spray pattern

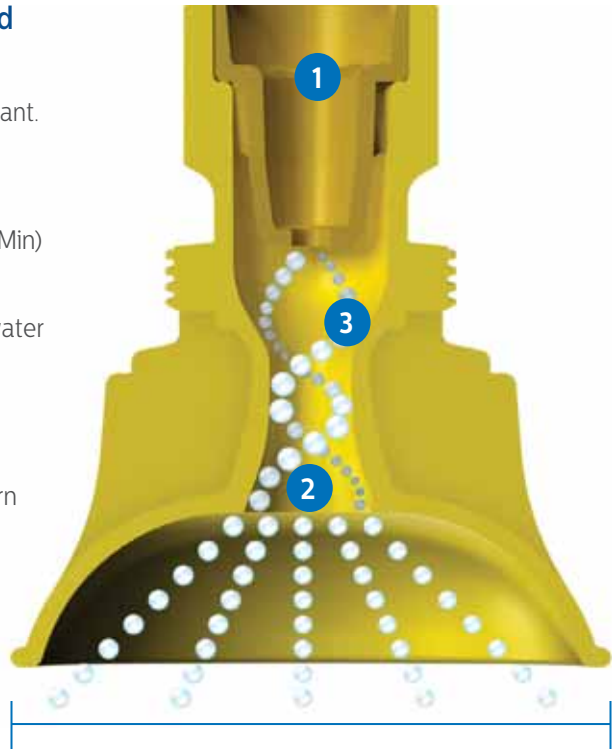

Smaller profile reduces risk of damage in busy industrial environments

SpinTec Uniform Distribution

OLD Uneven Distribution

SpinTec High Performance Stainless Steel

The 304 & 316 Stainless Steel showerhead provides the maximum corrosion resistance and durability for highly corrosive and abusive applications.

Recessed Flush-Mounted SpinTec Showerhead

Provides the smallest footprint and clean appearance of in-ceiling mounting. Easy to install.

SpinTec Showerhead with Stainless Steel Shroud

Provides new showerhead with a traditional looking shroud.

Keltech
Electric Water Heaters

Tough enough for the most extreme environments on earth

On demand supply of ANSI-required tepid water for safety showers and eye/face washes – in seconds.

- No need to keep a 300 gal (1136 L) tank heated 24/7/365
- Easy to install – just add water and power. All you need is one electrical connection and a cold water line
- Under constant flow and pressure, temperatures stay within +/-1° F of set point
- Precision systems custom engineered to fit your application
- Meets ANSI/ISEA Z358.1 standards and third-party verified to UL/CSA standards
- Only electric tankless water heaters registered with the National Board and certified with the HLW stamp
- Optional features include NEMA 4X stainless steel enclosures, explosion proof purge system, and freeze protection to -20°F

For information contact your Bradley Representative or visit bradleycorp.com

Environmental and hazardous chemicals and site conditions

Within these industries warranting additional consideration are shown below. This list is not intended to be exhaustive, but rather, to serve as a starting point to begin the evaluation process of what types of hazards warrant the installation of a drench shower or Eyewash fixture that provides an ANSI-compliant 15-minute flush. Industries subject to a higher accident ratio and an increased rate of OSHA audits are:

- Healthcare
- Industrial
- Education
- Construction
- Agriculture
- Government
- Hospitality
- Retail
- Laboratories
- Food Processing
- Paper Mills
- Automotive
- Mining
- Trades
- Aerospace
- Ethanol/Oil Refineries
- Wastewater Treatment
- Utilities

Common hazards that require a 15-minute flush

- Dust, dirt, salt, sand, cardboard, wood chips, powder, fine particulate
- Nails, wood slivers, staples
- Metal shavings, filings, dust, concrete, cement chips,
- Smoke, flammable or poisonous gases
- Insecticides, pesticides, herbicides, fumigants
- Solvents, stains, paint, thinner, acetone
- Bloodborne pathogens; blood, bodily fluids and remains
- Caustic water treatment chemicals
- Gas, diesel, cleaning solvents, antifreeze
- Laboratory chemicals, oxygen
- Bleach, chlorine, ammonia
- Battery acid, starter fluid, paints, oils, hydraulic fluid
- Bacteria, germs, biohazards
- Falling, flying or shifting debris, rocks, building materials and glass
- Thermal hazards, UV radiation burns (welder's flash), electrical arcs
- Acids, bases, solvents, lime
- Flammable liquids

Important information about compliance

The U.S. Code of Federal Regulations 29CFR 1910.151 states: "Where the eyes or body of any person may be exposed to injurious corrosive materials, suitable facilities for quick drenching or flushing of the eyes and body shall be provided within the work area for immediate emergency use."

The American National Standards Institute (ANSI) establishes standards for minimum performance and use requirements for Eyewash and shower equipment.

The ANSI/ISEA Z358.1-2014 for Emergency Eyewash and Shower Equipment provides detailed guidelines to which OSHA, State OSHA and other regulatory agencies commonly refer.

The Joint Commission 2014 EC Standard for Hospitals requires: "The hospital takes action to minimize or eliminate identified safety and security risks in the physical environment." Furthermore, hospitals are required to "Minimize risk associated with selecting, handling, storing, transporting, using, and disposing hazardous chemicals." Surveyors commonly refer to OSHA requirements and the ANSI Standard for further guidance on best demonstrated practices.

Canadian Provincial authorities also typically refer to ANSI standards when auditing for or advising proper requirements for emergency Eyewash showers.

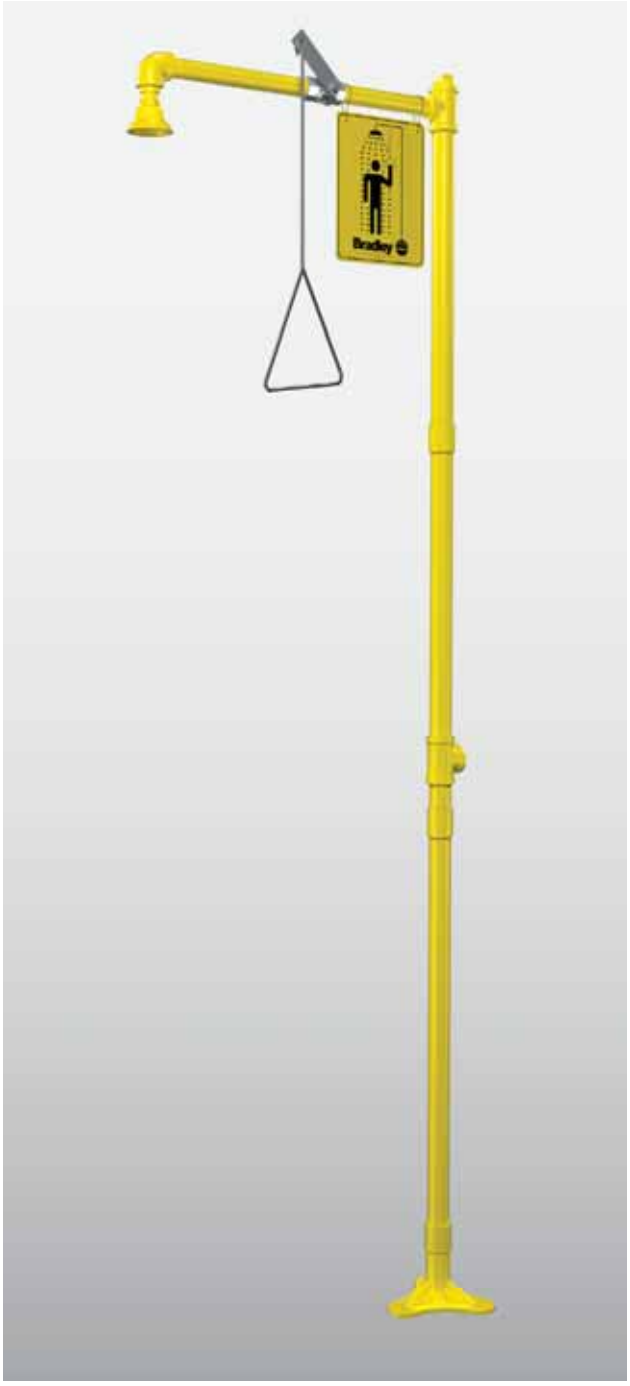

S19-110 Series

Overview

When there's the possibility of full-body chemical contamination, the first choice is an ANSI-compliant, full-body drench shower. Bradley drench showers, the S19-110 line of products, are a great choice when a wall-mounted drench shower isn't practical. And with the BradTect® corrosion-resistant yellow coating standard on most units, these drench showers are not only easy to see, but durable enough for your tough work environment.

Key Features

- SpinTec showerhead improves water distribution
- Exceeds ANSI minimum water flow of 20 GPM (76 L/Min) at 30 psi (207 kPa)
- Stay-open ball valve with single-step activation
- Triangular stainless steel pull rod
- Universal ID sign
- BradTect corrosion-resistant yellow coating (except on stainless steel, PVC and chrome models)
- 1¼" (32 mm) NPT inlet
- One-year warranty
- Top- or mid-level supply standard on all drench showers and combination units
- ANSI/ISEA Z358.1 certified models available
- AS/NZS4775:2007 & AS4020 certified models available

Emergency Fixture Facts

Drench showers are required to have 16" (406 mm) of clearance around the fixture, from the center of the spray pattern. ANSI /ISEA Z358.1 Section 4.1.4

Suggested Accessories

Standard and Explosion-Proof Signaling Systems	page 56-58
Drench Hose Spray Kits	page 84
Freeze and Scald Protection Valves	page 86

Other parts and accessories are listed beginning on page 84

Recommended Emergency TMV

Navigator® EFX 25 (S19-2100)

The current ANSI standard calls for emergency Eyewashes and drench showers to deliver tepid water (60–100°F/15.5–37.7°C) for 15 minutes. A thermostatic mixing valve is needed to mix the hot and cold water supply. Bradley's Navigator® TMVs are the most reliable emergency TMVs on the market. One valve is required per plumbed unit.

Quick Compliance Guide

This guide serves as a supplement to the ANSI/ISEA Z358.1-2014 standard.

Safety Drench Showers

- Valve mechanism opens in one second or less; it stays open until manually closed. (Section 4.2) ❶
- Supply with flushing fluid ("potable water, preserved water, preserved buffered saline solution or other medically acceptable solution…"). (Definitions, Sections 4.1.1, 4.4.1)
- Locate 10 seconds or 55' (16.8 m) from contaminants or hazardous materials. Locate on the same plane as hazard and free of obstructions. (Section 4.5.2, Appendix B5)
- Doors are an obstruction. (Appendix B5)
- Must resist corrosion in the presence of flushing fluid. (Section 4.1.5)
- Audible, visual and central control signal systems deter vandals and notify personnel that an accident occurred. (Appendix B4)
- Environmental conditions often require freeze or scald protection equipment. (Section 4.5.5)

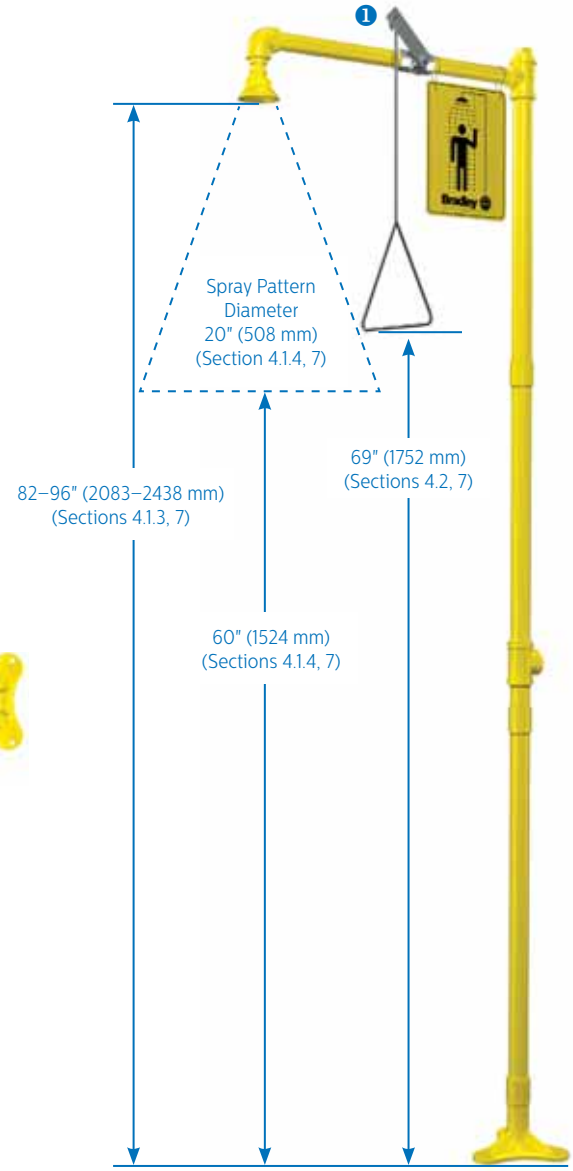

Top down view

Requires a 16" (406 mm) radius from the center of the drench shower spray pattern to be free of obstructions. (Section 4.1.4) ❷

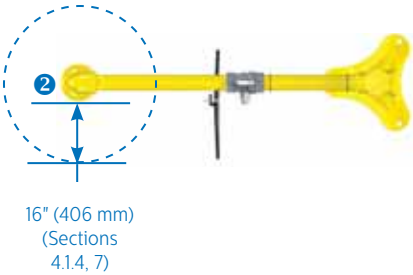

15-minute Flush	Tepid Water	Third-Party Certifications	Weekly Activations:	Annual Inspections
Compliant showers release a continuous flow of at least 20 GPM (76 L/Min) of tepid flushing fluid for a period of at least 15 minutes. (Sections 4.1.2, 4.4.1, 4.5.5, 4.5.6)	(lukewarm) 60–100°F (15.6–37.8°C) encourages full 15 minute flush or until medical personnel arrive. (Definitions, Sections 4.5.6, Appendix B6)	Manufacturers may have their safety fixtures independently evaluated by a third-party testing organization. Look for certification when selecting a compliant fixture. (Definitions)	Flush lines and test by activating weekly. Inspection tags are often included with fixtures to document testing and to satisfy a safety audit. (Section 4.6.2)	ANSI recommends a comprehensive annual inspection of the facility to evaluate modified work space, assess new hazards introduced into the area, and to identify fixtures needing replacement or repair. (Section 4.6.5)

FREE Confidential Safety Evaluation • 800.BRADLEY • bradleysafety.com

Freestanding Drench Showers

S19-110

Galvanized steel protected with BradTect corrosion-resistant yellow coating

Plastic showerhead

UL classified to meet ANSI/ISEA Z358.1

S19-110

S19-110SS

Same features as S19-110, except is an all stainless steel fixture

Bradley's stainless steel emergency fixtures in 304 stainless recommended for harsh environments

UL classified to meet ANSI/ISEA Z358.1

S19-110SS

S19-110SSZ

Same features as S19-110SS except with BSPP thread

Certified to AS4775 and AS4020

Barrier-Free, Freestanding Drench Showers

S19-110BF

Barrier-free design – fully accessible to people with physical disabilities

BradTect corrosion-resistant yellow coating

Plastic showerhead

UL classified to meet ANSI/ISEA Z358.1

S19-110BF

S19-110BFSS

Same features as S19-110BF, except is an all stainless steel fixture

Bradley's stainless steel emergency fixtures in 304 stainless recommended for harsh environments

UL classified to meet ANSI/ISEA Z358.1

S19-110BFSSZ

Same features as S19-110BFSS except with BSPP thread

Certified to AS4775 and AS4020

Please see Table of Contents for a complete listing of Bradley's barrier-free emergency products.

S19-120 and S19-130 series

Overview

A drench shower is required anywhere a MSDS sheet indicates that a full body flush may be required or where exposure to hazardous material is likely. Bradley's drench showers provide a complete full body deluge of water, to ensure that contaminants are rinsed from the body as rapidly and efficiently as possible. With water resources at a premium, Bradley's patented design features an integral 22 GPM (83 L/Min) flow restrictor that works in tandem with the showerhead flow pattern to ensure that the most effective ANSI 15-minute flush is achieved. Maximize your precious water resources by choosing Bradley.

Key Features

- SpinTec showerhead improves water distribution
- Stainless steel pull rod with triangular handle
- Stay-open ball valve
- BradTect coated galvanized steel pipe
- Horizontal/vertical: 1" (25 mm) water supply
- Freestanding: 1¼" (32 mm) water supply
- ANSI/ISEA Z358.1 certified models available
- AS/NZS4775:2007 & AS4020 certified models available
- One-year warranty

Emergency Fixture Facts

Bradley equips all ANSI-compliant emergency fixtures with a valve that will stay open until manually closed, allowing the user free use of their hands during an emergency. ANSI/ISEA Z358.1 Section 4.2

Suggested Accessories

Standard and Explosion-Proof Signaling Systems	page 56–58
Drench Hose Spray Kits	page 84
Freeze and Scald Protection Valves	page 86

Other parts and accessories are listed beginning on page 84

Recommended Emergency TMV

Navigator EFX 25 (S19-2100)

The current ANSI standard calls for emergency Eyewashes and drench showers to deliver tepid water (60–100°F/15.5–37.7°C) for 15 minutes. A thermostatic mixing valve is needed to mix the hot and cold water supply. Bradley's Navigator TMVs are the most reliable emergency TMVs on the market. One valve is required per plumbed unit.

Horizontal Drench Showers

S19-120

Galvanized steel protected with BradTect corrosion-resistant yellow coating

Impact-resistant plastic showerhead

UL classified to meet ANSI/ISEA Z358.1

S19-120

S19-120A

Same features as S19-120, except with stainless steel shroud

UL classified to meet ANSI/ISEA Z358.1

S19-120A

S19-120SS

Same features as S19-120, except is an all stainless steel fixture

UL classified to meet ANSI/ISEA Z358.1

S19-120SS

S19-120SSZ

Same features as S19-120SS except with BSPP thread

Certified to AS4775 and AS4020

Cord-Operated Horizontal Drench Showers

S19-120G

Galvanized steel protected with BradTect corrosion-resistant yellow coating

Impact-resistant plastic showerhead

Includes self-closing ball valve

Does not comply with ANSI/ISEA Z358.1

S19-120G

Frost Proof Horizontal Drench Showers

S19-120HFP

Galvanized steel protected with BradTect corrosion-resistant yellow coating

Impact-resistant plastic showerhead

Available in three wall thicknesses:
S19-120HFP8 0–8" (0–203 mm)
S19-120HFP12 8–12" (203–305 mm) – standard
S19-120HFP18 12–18" (305–457 mm)

UL classified to meet ANSI/ISEA Z358.1

S19-120HFP

Horizontal Drench Shower with Hose Spray

S19-120P

Galvanized steel protected with BradTect corrosion-resistant yellow coating

Impact-resistant plastic showerhead

Includes 8' (2.4 m) drench hose for body rinse

Easily wall mounted

UL classified to meet ANSI/ISEA Z358.1

S19-120P

Chrome-Plated Brass Horizontal Drench Shower

S19-120T

Chrome-plated, brass pipe and fittings for bright, mirror finish

Impact-resistant stainless steel shroud

Easily wall mounted

UL classified to meet ANSI/ISEA Z358.1

S19-120T

Flush-Mounted Horizontal Drench Shower

S19-120FM

- Integral flange mounts flush with ceiling
- Concealed pipe and fittings
- Galvanized steel protected with BradTect corrosion-resistant yellow coating
- UL classified to meet ANSI/ISEA Z358.1

S19-120FM

Barrier-Free Horizontal Drench Showers

S19-120BF

- Galvanized steel protected with BradTect corrosion-resistant yellow coating
- Impact-resistant plastic showerhead
- UL classified to meet ANSI/ISEA Z358.1

S19-120BF

S19-120ABF

- Same features as S19-120BF, except with stainless steel shroud
- UL classified to meet ANSI/ISEA Z358.1

S19-120ABF

S19-120SSBF

- Same features as S19-120BF, except is an all stainless steel fixture
- UL classified to meet ANSI/ISEA Z358.1

S19-120SSBFZ

- Same features as S19-120SSBF except with BSPP thread
- Certified to AS4775 and AS4020

Barrier-Free, Flush-Mounted Horizontal Drench Shower

S19-120FMBF

- Integral flange mounts flush with ceiling
- Concealed pipe and fittings
- Galvanized steel protected with BradTect corrosion-resistant yellow coating
- UL classified to meet ANSI/ISEA Z358.1

Vertical Drench Showers

S19-130

- Impact-resistant plastic showerhead
- UL classified to meet ANSI/ISEA Z358.1

S19-130

S19-130A

- Same features as S19-130, except with stainless steel shroud
- UL classified to meet ANSI/ISEA Z358.1

S19-130A

S19-130SS

- Same features as S19-130, except is an all stainless steel fixture
- UL classified to meet ANSI/ISEA Z358.1

S19-130SS

S19-130SSZ

- Same features as S19-130SS, except with BSPP thread
- Certified to AS4775 and AS4020

Cord-Operated Vertical Drench Showers

S19-130F

Impact-resistant plastic showerhead

Includes self-closing ball valve

Self-closing valve does not comply with ANSI/ISEA Z358.1

S19-130F

Barrier-Free Vertical Drench Showers

S19-130BF

Impact-resistant plastic showerhead

UL classified to meet ANSI/ISEA Z358.1

S19-130BF

S19-130ABF

Same features as S19-130BF, except with stainless steel showerhead

UL classified to meet ANSI/ISEA Z358.1

S19-130SSBF

Same features as S19-130ABF, except is an all stainless steel fixture

UL classified to meet ANSI/ISEA Z358.1

S19-130SSBFZ

Same features as S19-130SSBF except with BSPP thread

Certified to AS4775 and AS4020

Flow Controls

In the interest of water conservation, each shower head features an integral 20 GPM (76 L/Min) flow control. This item must be purchased separately for most competing brands.

Frost Proof

Bradley features frost-proof emergency fixtures for when an adjacent outside wall of a heated building is available. They can also be free standing with a buried supply pipe. See your local plumbing codes for code compliance.

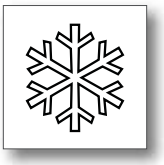

Barrier Free

Halo models are barrier-free. This provides ease of use for individuals with disabilities.

S19214 Series

Overview

Safety and maintenance personnel often select pedestal-mounted Eyewashes where a wall-mounted fixture is not practical due to site conditions. As a leading manufacturer of emergency fixtures, Bradley provides a variety of Eyewash solutions; barrier-free, frost-proof or stainless steel fixtures with a variety of different spray patterns. Committed to providing a strong value proposition, Bradley also offers complimentary safety inspections to facilities, providing expert advice about emergency fixture solutions.

Key Features

- Halo Eyewashes and eye/face washes provide the most washdown coverage available
- Exceed ANSI-mandated flow rates
- Universal activation
- BradTect coated galvanized steel pipe
- ½" (13 mm) water supply, 1¼" (32 mm) waste
- All pedestal-mounted units with Halo meet barrier-free requirements
- One-year warranty
- ANSI/ISEA Z358.1 certified models available
- AS/NZS4775:2007 & AS4020 certified models available

Emergency Fixture Facts

The emergency fixture must provide a continuous flow of flushing fluid.
ANSI/ISEA Z358.1 Section 5.4.5, 6.4.5

Suggested Accessories

Standard and Explosion-Proof Signaling Systems	page 56–58
Drench Hose Spray Kits	page 84
Freeze and Scald Protection Valves	page 86
Retrofit Dust Cover Kits	page 88, 90-91
Foot Treadle Kits	page 95

Other parts and accessories are listed beginning on page 84

Recommended Emergency TMV

Navigator EFX 8 (S19-2000)

The current ANSI standard calls for emergency Eyewashes and drench showers to deliver tepid water (60–100°F/15.5–37.7°C) for 15 minutes. A thermostatic mixing valve is needed to mix the hot and cold water supply. Bradley's Navigator TMVs are the most reliable emergency TMVs on the market. One valve is required per plumbed unit.

Don't see the product you are looking for? Go to page 22 to use the S19214 Configurator

Quick Compliance Guide

This guide serves as a supplement to the ANSI/ISEA Z358.1-2014 standard.

Eye and Eye/Face Wash Fixtures

- Valve mechanism opens in one second or less; it stays open until manually closed. (Sections 5.2, 6.2) ❶
- Supply with flushing fluid, ("potable water, preserved water, preserved buffered saline solution or other medically acceptable solution...") Definitions, Sections 5.1.1, 6.1.1)
- Locate 10 seconds or 55' (16.8 m) from contaminants or hazardous materials. Locate on the same plane as hazard and free of obstructions. (Sections 5.4.2, 6.4.2, Appendix B5)
- Must resist corrosion in the presence of flushing fluid. (Sections 5.1.5, 6.1.5) ❷
- Protect eye and eye/face wash heads from contaminants. (Sections 5.1.3, 6.1.3)
- Flow Rates: **Eyewash** unit delivers a minimum of .4 GPM (1.5 L/Min) for 15 minutes. (Section 5.1.6) **Eye/face wash** unit delivers a minimum of 3.0 GPM (11 L/Min) for 15 minutes. (Section 6.1.6)
- Use a flow meter to test flow rate; use a test gauge to test flow pattern. (Sections 5.1.8, 5.3.1, 6.1.7, 6.1.8, 6.3, 6.3.1)
- Audible, visual and central control signal systems deter vandalism and alert safety personnel. (Appendix B4)
- Environmental conditions often require freeze or scald protection equipment. (Sections 5.4.5, 6.4.5)

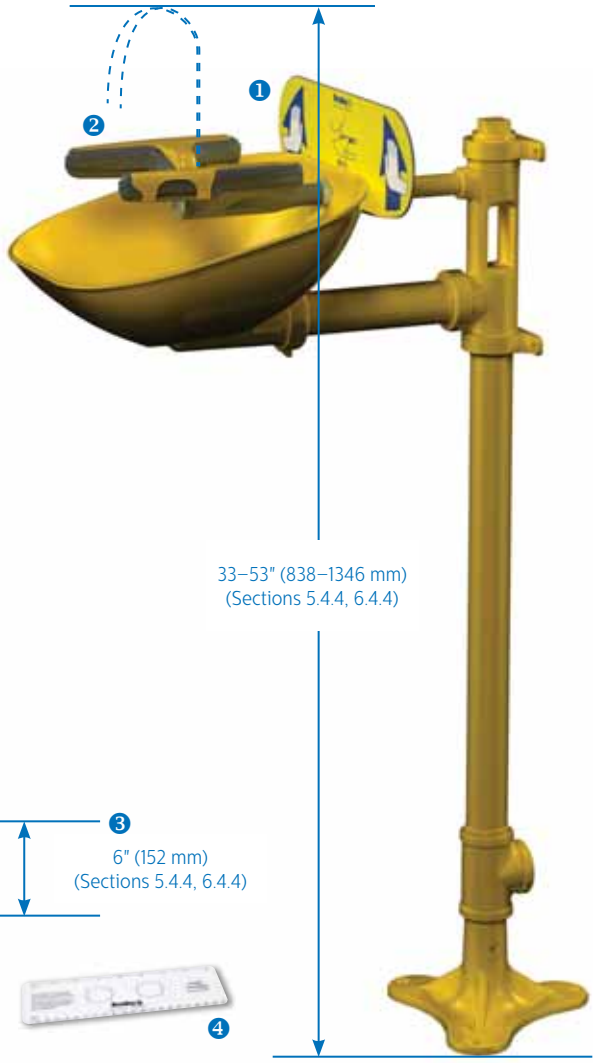

Top down view

Required to be free of obstructions a minimum of 6" (152 mm) from the outside of the eye or eye/face wash sprayheads. (Sections 5.4.4, 6.4.4) ❸

Use a Bradley test gauge (Model 269-1444) to check flow pattern. ❹

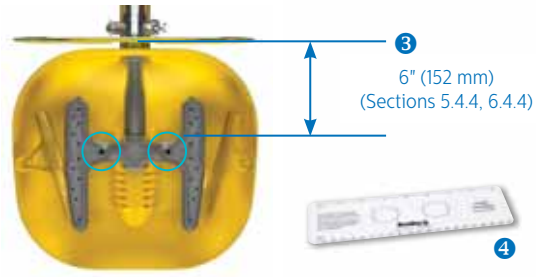

15-minute Flush	Tepid Water	Third-Party Certifications	Weekly Activations:	Annual Inspections
Compliant fixtures release a continuous flow of tepid flushing fluid for a minimum of 15 minutes. (Sections 5.1.6, 5.4.5, 5.4.6, 6.1.6, 6.4.5, 6.4.6)	(lukewarm) 60–100°F (15.6–37.8°C) encourages full 15 minute flush or until medical personnel arrive. (Definitions, Sections 5.4.6, 6.4.6, Appendix B6)	Manufacturers may have their safety fixtures independently evaluated by a third-party testing organization. Look for certification when selecting a compliant fixture. (Definitions)	Flush lines and test by activating weekly. Inspection tags are often included with fixtures to document testing and to satisfy a safety audit. (Sections 5.5.2, 6.5.2)	ANSI recommends a comprehensive annual inspection of the facility to evaluate modified work space, assess new hazards introduced into the area, and to identify fixtures needing replacement or repair. (Sections 5.5.2, 5.5.5, 6.5.2, 6.5.5)

FREE Confidential Safety Evaluation • 800.BRADLEY • bradleysafety.com

Pedestal-Mounted Eyewashes

S19214EW

Galvanized steel protected with BradTect corrosion-resistant yellow coating

Plastic bowl

UL classified to meet ANSI/ISEA Z358.1

S19214EW

S19214EWZ

Same features as S19214EW except with BSPP thread

S19214EWZS

All stainless steel piping

Plastic bowl

BSPP thread

Certified to AS4775 and AS4020

S19214EWZS

S19214B

Galvanized steel protected with BradTect corrosion-resistant yellow coating

Stainless steel bowl

UL classified to meet ANSI/ISEA Z358.1

S19214B

S19214BZ

Same features as S19214B except with BSPP thread

S19214BZS

All stainless steel piping

Stainless steel bowl

BSPP thread

Certified to AS4775 and AS4020

S19214BZS

Pedestal-Mounted Eyewashes with Hinged Dust Cover

S19214PDC

Galvanized steel protected with BradTect corrosion-resistant yellow coating

Plastic bowl and dust cover

UL classified to meet ANSI/ISEA Z358.1

S19214PDC

S19214PDCZ

Same features as S19214PDC except with BSPP thread

S19214PDCZS

All stainless steel piping

Plastic bowl and dust cover

BSPP thread

Certified to AS4775 and AS4020

S19214PDCZS

S19214DC

Galvanized steel protected with BradTect corrosion-resistant yellow coating

Stainless steel bowl and dust cover

UL classified to meet ANSI/ISEA Z358.1

S19214DC

S19214DCZ

Same features as S19214DC except with BSPP thread

S19214DCZS

All stainless steel piping

Stainless steel bowl and dust cover

BSPP thread

Certified to AS4775 and AS4020

S19214DCZS

S19214Y

Galvanized steel protected with BradTect corrosion-resistant yellow coating

Stainless steel bowl

UL classified to meet ANSI/ISEA Z358.1

S19214Y

S19214YZ

Same features as S19214Y except with BSPP thread

S19214YZS

All stainless steel piping

Stainless steel bowl

BSPP thread

Certified to AS4775 and AS4020

S19214YZS

Pedestal-Mounted Eye/Face Washes

S19214FW

Galvanized steel protected with BradTect corrosion-resistant yellow coating

Plastic bowl

UL classified to meet ANSI/ISEA Z358.1

S19214FW

S19214FWZ

Same features as S19214FW except with BSPP thread

S19214FWZS

All stainless steel piping

Plastic bowl

BSPP thread

Certified to AS4775 and AS4020

S19214FWZS

S19214YF

Hand or foot operation

Galvanized steel protected with BradTect corrosion-resistant yellow coating

Stainless steel bowl

UL classified to meet ANSI/ISEA Z358.1

S19214YF

S19214YFZ

Same features as S19214YF except with BSPP thread

S19214YFZS

Hand or foot operation

All stainless steel piping

Stainless steel bowl

BSPP thread

Certified to AS4775 and AS4020

S19214YFZS

Pedestal-Mounted Eye/Face Wash with Hose Spray

S19214P

8' (2.4 m) hand-held drench hose attachment for body rinse

Galvanized steel protected with BradTect corrosion-resistant yellow coating

Stainless steel bowl

UL classified to meet ANSI/ISEA Z358.1

S19214P

S19214PZ

Same features as S19214P except with BSPP thread

AS4775 & AS4020 certified

Pedestal-Mounted Eyewashes with Hinged Dust Cover

S19214PDCFW

Galvanized steel protected with BradTect corrosion-resistant yellow coating

Plastic bowl and dust cover

UL classified to meet ANSI/ISEA Z358.1

S19214PDCFW

S19214PDCFWZ

Same features as S19214PDCFW except with BSPP thread

S19214PDCFWZS

All stainless steel piping

Plastic bowl and dust cover

BSPP thread

Certified to AS4775 and AS4020

S19214PDCFWZS

S19214DCFW

Galvanized steel protected with BradTect corrosion-resistant yellow coating

Stainless steel bowl and dust cover

UL classified to meet ANSI/ISEA Z358.1

S19214DCFW

S19214DCFWZ

Same features as S19214DCFW except with BSPP thread

S19214DCFWZS

All stainless steel piping

Stainless steel bowl and dust cover

BSPP thread

Certified to AS4775 and AS4020

S19214DCFWZS

All Stainless Steel Pedestal-Mounted Eye/Face Washes

S19214BSS

All stainless steel fixture

UL classified to meet ANSI/ISEA Z358.1

S19214BSS

S19214BSSZ

Same features as S19214BSS except with BSPP thread

Certified to AS4775 and AS4020

S19214SC

All stainless steel fixture

Hinged dust cover

UL classified to meet ANSI/ISEA Z358.1

S19214SC

S19214SCZ

Same features as S19214SC
except with BSPP thread

S19214SS

All stainless steel fixture

Hand or foot operation

UL classified to meet ANSI/ISEA Z358.1

S19214SS

S19214SSZ

Same features as S19214SS
except with BSPP thread

Eyewashes

When the safety risk targets the eye area, Bradley's Eyewashes are the recommended solution for emergency care. The Eyewash sprayheads flow at approximately 5.1 GPM (19 L/Min), exceeding ANSI's 0.4 GPM (1.5 L/Min) flow rate. The flow gently flushes water directly on the eye to wash out contaminants.

Eye/Face Washes

When chemicals and other hazardous liquids can contaminate the face and eyes, an eye/face wash is the solution. Bradley's eye/face wash heads feature integral flow controls that provide a soft flush of approximately 5.1 GPM (19 L/Min). Eye/face washes are considered premium fixtures that exceed ANSI's 3.0 GPM (11 L/Min) mandate.

Dust Covers

The most effective way to keep the unit clean and functioning properly is to have a dust cover over the eye or eye/face wash. See-through plastic dust covers provide effective dust protection, but also allow for easy inspection. These covers automatically open when the eye or eye/face wash is activated. Dust covers are available as standard equipment on many eye and eye/face washes, or can be ordered as a retrofit kit.

Foot Treadle

Foot treadles provide hands-free activation for eye and eye/face washes. Foot treadles are available as standard equipment on some eye and eye/face washes, or can be ordered as a retrofit kit.

S19214 Series Configurator

Don't see a model that meets your application? Use the selections below to build one to suit your needs. Select one option from each category. Fill in the squares below with the corresponding option letter or number. Use the resulting alphanumeric number to specify the model and configuration for your desired product.

1 Configuration

- **B** 24 in (61 cm) Drain Height
- **0** 6 in (15.2 cm) Drain Height, Standard

2 Pipe Material

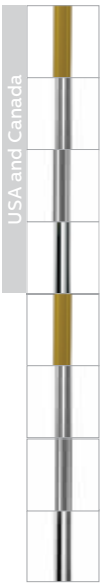

- **A** NPT ▸, Yellow BradTect Galvanized Steel, 1.25 in (32 mm)
- **B** NPT ▸, All 304 Stainless Steel, 1.25 in (32 mm)
- **C** NPT ▸, All 316 Stainless Steel,* 1.25 in (32 mm)
- **D** NPT ▸, Chrome-Plated, 1.25 in (32 mm)
- **F** BSPP ◊, Yellow BradTect Galvanized Steel, 1.25 in (32 mm)
- **G** BSPP ◊, All 304 Stainless Steel, 1.25 in (32 mm)
- **H** BSPP ◊, All 316 Stainless Steel, 1.25 in (32 mm)
- **J** BSPP ◊, Chrome-Plated, 1.25 in (32 mm)

3 Ball Valve

- **1** Stay-Open Eyewash, Chrome-Plated Brass
- **2** Stay-Open Eyewash, 316 SS

4 Eyewash or Eye/Face Wash

- **A** Halo Eyewash
- **B** Halo Eye/Face Wash
- **D** Halo Eyewash, 304 SS Yoke
- **E** Halo Eye/Face Wash, 304 SS Yoke
- **F** Halo 304 Stainless Eye/Face Wash, 304 SS Yoke**
- **G** Halo Eyewash, 316 SS Yoke
- **H** Halo Eye/Face Wash, 316 SS Yoke
- **J** Halo 316 Stainless Eye/Face Wash, 316 SS Yoke**

5 Bowl and Dust Cover

- **A** Plastic Bowl, No Dust Cover
- **B** Plastic Bowl, Plastic Dust Cover
- **D** 304 SS, No Dust Cover
- **E** 304 SS, 304 SS Dust Cover
- **F** 304 SS, Plastic Dust Cover
- **G** 316 SS, No Dust Cover
- **H** 316 SS, 316 SS Dust Cover
- **J** 316 SS, Plastic Dust Cover
- **0** No Bowl or Dust Cover

6 Activation

- **A** 300 SS Handle
- **B** 316 SS Handle
- **C** 300 SS Handle with 300 SS Foot Pedal *
- **D** 300 SS Handle with 316 SS Foot Pedal *
- **E** 316 SS Handle with 316 SS Foot Pedal *

7 Drench Hose and Back-flowPrevention

- **A** Drench Hose Kit with Vacuum Breaker
- **B** Drench Hose Kit with N9 Back-flowPreventer
- **C** Drench Hose Kit with 9D Back-flowPreventer
- **D** Drench Hose Kit without Back-flowPreventer
- **0** No Drench Hose and No Back-flowPrevention

8 Freeze and Scald Protection

- **N** Anti-Freeze Valve
- **P** Anti-Scald Valve
- **R** Anti-Freeze and Anti-Scald Valves
- **0** No Anti-Freeze Valve and No Anti-Scald Valve
- **Z** Anti-Freeze and Anti-Scald Valve Ready

▸ *NPT (National Pipe Thread).*

◊ *BSPP (British Standard Pipe Parallel Threads)*

* *Not available with barrier-free configurations.*

***Must select stainless steel pipe and ball valve when stainless steel eye/face wash is required.*

Fill in 1 through 8 to specify the Halo model and configuration for your desired project:

						1	2	3	4	5	6	7	8
S	1	9	2	1	4								

S19224 series

Overview

Wall-mounted emergency units are classic fixtures that originated from safety's early days. The classic fixture evolved from a basic Eyewash model with little to no options, to the fixtures of today with standard high visibility, yellow corrosion-resistant coating, plastic and stainless steel dust covers, various flow rates and flow patterns to flush the most elusive contaminants from the face. Wall-mounted fixtures are among the most compact, versatile safety solutions on the market. They can be found in industrial facilities, airports, auto repair shops, food processing environments and paper mills to name a few.

Key Features

- Halo Eyewashes and eye/face washes provide the most washdown coverage available
- Dust cover protects fixture from dust and debris
- Fixtures exceed ANSI-mandated flow rates
- Single-step activation
- BradTect corrosion-resistant yellow coating
- Wall-mounted units with Halo meet barrier-free requirements
- ANSI/ISEA Z358.1 certified models available
- AS/NZS4775:2007 & AS4020 certified models available
- One-year warranty

Emergency Fixture Facts

An ANSI-compliant Eyewash provides 15-minutes of flushing fluid.
ANSI/ISEA Z358.1 Section 5.1.6, 6.1.6

Suggested Accessories

Standard and Explosion-Proof Signaling Systems	page 56–58
Drench Hose Spray Kits	page 84
Freeze and Scald Protection Valves	page 86
Retrofit Dust Cover Kits	page 88, 90-91
Foot Treadle Kits	page 95

Other parts and accessories are listed beginning on page 84

Recommended Emergency TMV

Navigator EFX 8 (S19-2000)

The current ANSI standard calls for emergency Eyewashes and drench showers to deliver tepid water (60–100°F/15.5–37.7°C) for 15 minutes. A thermostatic mixing valve is needed to mix the hot and cold water supply. Bradley's Navigator TMVs are the most reliable emergency TMVs on the market. One valve is required per plumbed unit.

Don't see the product you are looking for? Go to page 31 to use the S19224 Configurator

Wall-Mounted Eyewashes

S19224EW

Galvanized steel protected with BradTect corrosion-resistant yellow coating

Plastic bowl

UL classified to meet ANSI/ISEA Z358.1

S19224EW

S19224EWZ

Same features as S19224EW except with BSPP thread

S19224EWZS

All stainless steel piping

Plastic bowl

BSPP thread

Certified to AS4775 and AS4020

S19224EWZS

S19224B

Galvanized steel protected with BradTect corrosion-resistant yellow coating

Stainless steel bowl

UL classified to meet ANSI/ISEA Z358.1

S19224B

S19224BZ

Same features as S19224B except with BSPP thread

S19224BZS

All stainless steel piping

Stainless steel bowl

BSPP thread

Certified to AS4775 and AS4020

S19224BZS

S19224PT

Tailpiece and P-trap

Galvanized steel protected with BradTect corrosion-resistant yellow coating

Plastic bowl

UL classified to meet ANSI/ISEA Z358.1

S19224PT

S19224PTZ

Same features as S19224PT except with BSPP thread

S19224PTZS

Tailpiece and P-trap

All stainless steel piping

Plastic bowl

BSPP thread

S19224PTZS

S19224BPT

Tailpiece and P-trap

Galvanized steel protected with BradTect corrosion-resistant yellow coating

Stainless steel bowl

UL classified to meet ANSI/ISEA Z358.1

S19224BPT

S19224BPTZ

Same features as S19224BPT except with BSPP thread

S19224BPTZS

- Tailpiece and P-trap
- All stainless steel piping
- Stainless steel bowl
- BSPP thread

S19224BPTZS

Wall-Mounted Eyewashes with Hinged Dust Cover

S19224PDC

- Galvanized steel protected with BradTect corrosion-resistant yellow coating
- Plastic bowl and dust cover
- UL classified to meet ANSI/ISEA Z358.1

S19224PDC

S19224PDCZ

Same features as S19224PDC except with BSPP thread

S19224PDCZS

- All stainless steel piping
- Plastic bowl and dust cover
- BSPP thread
- Certified to AS4775 and AS4020

S19224PDCZS

S19224DC

- Galvanized steel protected with BradTect corrosion-resistant yellow coating
- Stainless steel bowl and dust cover
- UL classified to meet ANSI/ISEA Z358.1

S19224DC

S19224DCZ

Same features as S19224DC except with BSPP thread

S19224DCZS

- All stainless steel piping
- Stainless steel bowl and dust cover
- BSPP thread
- Certified to AS4775 and AS4020

S19224DCZS

S19224DCPT

- Tailpiece and P-trap
- Galvanized steel protected with BradTect corrosion-resistant yellow coating
- Stainless steel bowl and dust cover
- UL classified to meet ANSI/ISEA Z358.1

S19224DCPT

S19224DCPTZ

Same features as S19224DCPT except with BSPP thread

S19224DCPTZS

- Tailpiece and P-trap
- All stainless steel piping
- Stainless steel bowl and dust cover
- BSPP thread

S19224DCPTZS

Wall-Mounted Eye/Face washes

S19224FW

Galvanized steel protected with BradTect corrosion-resistant yellow coating

Plastic bowl

UL classified to meet ANSI/ISEA Z358.1

S19224FW

S19224FWZ

Same features as S19224FW except with BSPP thread

S19224FWZS

All stainless steel piping

Plastic bowl

BSPP thread

Certified to AS4775 and AS4020

S19224FWZS

S19224FWPT

Tailpiece and P-trap

Galvanized steel protected with BradTect corrosion-resistant yellow coating

Plastic bowl

UL classified to meet ANSI/ISEA Z358.1

S19224FWPT

S19224FWPTZ

Same features as S19224FWPT except with BSPP thread

S19224FWPTZS

Tailpiece and P-trap

All stainless steel piping

Plastic bowl

BSPP thread

S19224FWPTZS

S19224T

Galvanized steel protected with BradTect corrosion-resistant yellow coating

Stainless steel bowl

UL classified to meet ANSI/ISEA Z358.1

S19224T

S19224TZ

Same features as S19224T except with BSPP thread

S19224TZS

All stainless steel piping

Stainless steel bowl

BSPP thread

Certified to AS4775 and AS4020

S19224TZS

S19224P

8' (2.4 m) hand-held drench hose for body rinse

Galvanized steel protected with BradTect corrosion-resistant yellow coating

Stainless steel bowl

UL classified to meet ANSI/ISEA Z358.1

S19224P

S19224PZ

Same features as S19224P except with BSPP thread

S19224TPT

Tailpiece and P-trap

Galvanized steel protected with BradTect corrosion-resistant yellow coating

Stainless steel bowl

UL classified to meet ANSI/ISEA Z358.1

S19224TPT

S19224TPTZ

Same features as S19224TPT except with BSPP thread

S19224TPTZS

Tailpiece and P-trap

All stainless steel piping

Stainless steel bowl

BSPP thread

S19224TPTZS

S19224Y

Hand or foot operation

Galvanized steel protected with BradTect corrosion-resistant yellow coating

Stainless steel bowl

UL classified to meet ANSI/ISEA Z358.1

Unit is not Barrier-Free

S19224Y

S19224YZ

Same features as S19224Y except with BSPP thread

Unit is not Barrier-Free

S19224YZS

Hand or foot operation

All stainless steel piping

Stainless steel bowl

BSPP thread

Certified to AS4775 and AS4020

Unit is not Barrier-Free

S19224YZS

Wall-Mounted Eye/face Washes with Hinged Dust Cover

S19224PDCFW

Galvanized steel protected with BradTect corrosion-resistant yellow coating

Plastic bowl and dust cover

UL classified to meet ANSI/ISEA Z358.1

S19224PDCFW

S19224PDCFWZ

Same features as S19224PDCFW except with BSPP thread

S19224PDCFWZS

All stainless steel piping

Plastic bowl and dust cover

BSPP thread

Certified to AS4775 and AS4020

S19224PDCFWZS

S19224DCFW

Galvanized steel protected with BradTect corrosion-resistant yellow coating

Stainless steel bowl and dust cover

UL classified to meet ANSI/ISEA Z358.1

S19224DCFW

S19224DCFWZ

Same features as S19224DCFW except with BSPP thread

S19224DCFWZS

All stainless steel piping

Stainless steel bowl and dust cover

BSPP thread

Certified to AS4775 and AS4020

S19224DCFWZS

S19224DCRPT

Tailpiece and P-trap

Galvanized steel protected with BradTect corrosion-resistant yellow coating

Stainless steel bowl and dust cover

UL classified to meet ANSI/ISEA Z358.1

S19224DCRPT

S19224DCRPTZ

Same features as S19224DCRPT except with BSPP thread

S19224DCRPTZS

Tailpiece and P-trap

All stainless steel piping

Stainless steel bowl and dust cover

BSPP thread

S19224DCRPTZS

All Stainless Steel Eyewashes and Eye/Face Washes

S19224SC

All stainless steel fixture

Hinged dust cover

UL classified to meet ANSI/ISEA Z358.1

S19224SC

S19224SCZ

Same features as S19224SC except with BSPP thread

Certified to AS4775 and AS4020

S19224SS

All stainless steel fixture

UL classified to meet ANSI/ISEA Z358.1

S19224SS

S19224SSZ

Same features as S19224SS except with BSPP thread

Certified to AS4775 and AS4020

Barrier-Free, Wall-Mounted Eye/Face Wash with Wrap-Around Skirt

S19-220BF

Stainless steel wrap-around skirt and eyewash bowl

Features chrome-plated circular spray ring for full face spray

UL classified to meet ANSI/ISEA Z358.1

S19-220BF

Frost-Proof, Wall-Mounted Eyewash

S19-220HFP

Galvanized steel protected with BradTect corrosion-resistant yellow coating

Stainless steel bowl

Available in three wall thicknesses:

S19-220HFP8	0–8" (0–203 mm)
S19-220HFP12	8–12" (203–305 mm) – standard
S19-220HFP18	12–18" (305–457 mm)

UL classified to meet ANSI/ISEA Z358.1

S19-220HFP

Eye and Eye/Face Wash Bowls

Bradley's eye and eye/face wash bowls come in two different materials – plastic and stainless steel. The high-visibility plastic bowls are intended for general use. The impact-resistant plastic will stand up to regular wear and tear. For the most durable bowl, select stainless steel bowls for rugged environments, where impact and corrosion could be a problem.

Dust Covers

The most effective way to keep the unit clean and functioning properly is to have a dust cover over the eye or eye/face wash. See-through plastic dust covers provide effective dust protection, but also allow for easy inspection.

These covers automatically open when the eye or eye/face wash is activated. Dust covers are available as standard equipment on many eye and eye/face washes, or can be ordered as a retrofit kit.

Frost Proof

Bradley features frost-proof emergency fixtures for when an adjacent outside wall of a heated building is available. They can also be free standing with a buried supply pipe. See your local plumbing codes for code compliance.

Barrier Free

Halo models are barrier-free. This provides ease of use for individuals with disabilities.

S19224 Series Configurator

Don't see a model that meets your application? Use the selections below to build one to suit your needs. Select one option from each category. Fill in the squares below with the corresponding option letter or number. Use the resulting alphanumeric number to specify the model and configuration for your desired product.

1 Configuration

O Standard Wall Mount

2 Pipe Material

USA and Canada

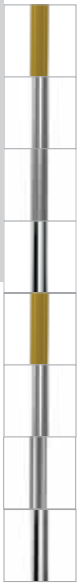

A NPT ▸, Yellow BradTect Galvanized Steel, 1.25 in (32 mm)

B NPT ▸, All 304 Stainless Steel, 1.25 in (32 mm)

C NPT ▸, All 316 Stainless Steel,* 1.25 in (32 mm)

D NPT ▸, Chrome-Plated, 1.25 in (32 mm)

F BSPP ◊, Yellow BradTect Galvanized Steel, 1.25 in (32 mm)

G BSPP ◊, All 304 Stainless Steel, 1.25 in (32 mm)

H BSPP ◊, All 316 Stainless Steel,* 1.25 in (32 mm)

J BSPP ◊, Chrome-Plated, 1.25 in (32 mm)

3 Ball Valve

1 Stay-Open Eyewash, Chrome-Plated Brass

2 Stay-Open Eyewash, 316 SS

4 Eyewash or Eye/Face Wash

A Halo Eyewash

B Halo Eye/Face Wash

D Halo Eyewash, 304 SS Yoke

E Halo Eye/Face Wash, 304 SS Yoke

F Halo 304 Stainless Eye/Face Wash, 304 SS Yoke **

G Halo Eyewash, 316 SS Yoke

H Halo Eye/Face Wash, 316 SS Yoke

J Halo 316 Stainless Eye/Face Wash, 316 SS Yoke **

5 Bowl and Dust Cover

A Plastic Bowl, No Dust Cover

B Plastic Bowl, Plastic Dust Cover

D 304 SS, No Dust Cover

E 304 SS, 304 SS Dust Cover

F 304 SS, Plastic Dust Cover

G 316 SS, No Dust Cover

H 316 SS, 316 SS Dust Cover

J 316 SS, Plastic Dust Cover

O No Bowl or Dust Cover

6 Activation

A 300 SS Handle

B 316 SS Handle

D 300 SS Handle with 300 SS Foot Pedal *

7 Waste

A Tail-piece

D P-trap

O No Waste

8 Drench Hose and Back-flow Prevention

A Drench Hose Kit with Vacuum Breaker

B Drench Hose Kit with N9 Back-flow Preventer

C Drench Hose Kit with 9D Back-flow Preventer

D Drench Hose Kit without Back-flow Preventer

O No Drench Hose and No Back-flow Prevention

9 Freeze and Scald Protection

N Anti-Freeze Valve

P Anti-Scald Valve

R Anti-Freeze and Anti-Scald Valves

O No Anti-Freeze Valve and No Anti-Scald Valve

Z **Anti-Freeze and Anti-Scald Valve Ready**

▸ *NPT (National Pipe Thread).*

◊ *BSPP (British Standard Pipe Parallel Threads)*

* *Not available with barrier-free configurations.*

***Must select stainless steel pipe and ball valve when stainless steel eye/face wash is required.*

Fill in 1 through 8 to specify the Halo model and configuration for your desired project:

						1	2	3	4	5	6	7	8
S	1	9	2	2	4								

S19314 Series

Overview

Bradley's S19314 Series is the most complete safety fixture on the market. The drench shower provides full-body relief from contamination, and the eye or eye/face wash targets those areas of the body where a gentle spray of water is optimal.

Key Features

- Halo Eyewashes and eye/face washes provide the most washdown coverage available
- SpinTec showerhead improves water distribution
- Stay-open ball valve with single-step activation
- Triangular stainless steel pull rod
- BradTect corrosion-resistant yellow coating (except on stainless steel, PVC and chrome models)
- Frost-proof and barrier-free models available
- Universal ID sign
- Top- or mid-level supply standard on all drench showers and combination units
- Integrated eye or eye/face wash with capped Eyewash heads
- One-year warranty
- 1¼" (32 mm) NPT inlet
- Single-step eye or eye/face wash activation
- Single-step drench shower activation
- ANSI/ISEA Z358.1 certified models available
- AS/NZS4775:2007 & AS4020 certified models available

Emergency Fixture Facts

Locate safety fixtures 10 seconds or 55' (16.8 m) from a hazardous area. ANSI/ISEA Z358.1 Section 7.4.2, Appendix B5

Suggested Accessories

Standard and Explosion-Proof Signaling Systems	page 56–58
Drench Hose Spray Kits	page 84
Freeze and Scald Protection Valves	page 86
Retrofit Dust Cover Kits	page 88, 90-91
Foot Treadle Kits	page 95

Other parts and accessories are listed beginning on page 84

Recommended Emergency TMV

Navigator EFX 25 (S19-2100)

The current ANSI standard calls for emergency Eyewashes and drench showers to deliver tepid water (60–100°F/ 15.5–37.7°C) for 15 minutes. A thermostatic mixing valve is needed to mix the hot and cold water supply. Bradley's Navigator TMVs are the most reliable emergency TMVs on the market. One valve is required per plumbed unit.

Don't see the product you are looking for? Go to page 45 to use the S19314 Configurator

Quick Compliance Guide

This guide serves as a supplement to the ANSI/ISEA Z358.1-2014 standard.

Combination Drench Shower, Eye and Eye/Face Washes

- Valve mechanism opens in one second or less; it stays open until manually closed. (Sections 4.2, 5.2, 6.2, 7.1.1, 7.1.2, 7.1.3) ❶
- Drench shower and eye or eye/face wash must operate simultaneously. (Section 7.4.4)
- Supply with flushing fluid ("potable water, preserved water, preserved buffered saline solution or other medically acceptable solution…"). (Definitions, Sections 4.1.1, 4.4.1, 5.1.1, 6.1.1, 7.1.2, 7.1.3)
- Locate 10 seconds or 55' (16.8 m) from contaminants or hazardous materials. Locate on same plane as the hazard, free of obstructions. (Sections 4.5.2, 5.4.2, 6.4.2, 7.1.1, 7.1.2, 7.1.3, 7.4.2, Appendix B5) ❷
- Must resist corrosion in the presence of flushing fluid (Sections 4.1.5, 5.1.5, 6.1.5, 7.1.1, 7.1.2, 7.1.3)
- Protect eye and eye/face wash heads from contaminants. (Sections 5.1.3, 6.1.3, 7.1.2, 7.1.3)
- Flow Rates: **Eyewash** unit delivers a minimum of .4 GPM (1.5 L/Min) for 15 minutes. (Section 5.1.6) **Eye/face wash** unit delivers a minimum of 3.0 GPM (11 L/Min) for 15 minutes. (Section 6.1.6)
- Use flow meter to check flow rate; use test gauge to test flow pattern. (Sections 5.1.8, 5.3.1, 6.1.7, 6.3, 7.1.2, 7.1.3)
- Environmental conditions often require freeze or scald protection equipment. (Sections 4.5.5, 5.4.5, 6.4.5, 7.1.1, 7.1.2, 7.1.3)

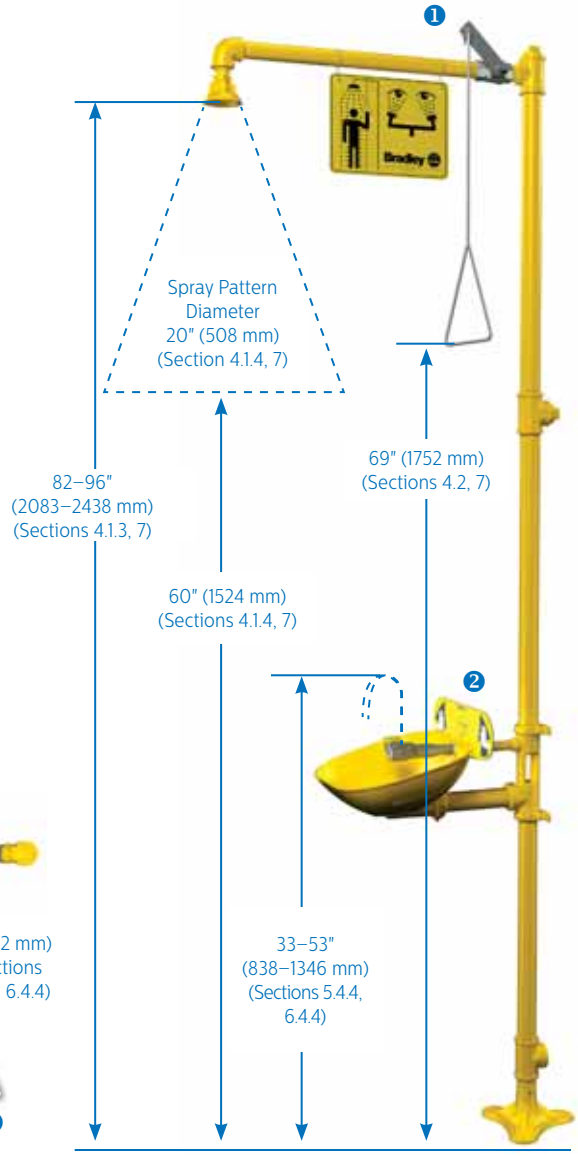

Top down view

Requires a 16" (406 mm) radius from the center of the drench shower spray pattern to be free of obstructions. (Sections 4.1.4, 7.1.1) ❸

Required to be free of obstructions a minimum of 6" (152 mm) from the outside of the eye or eye/face wash sprayheads. (Sections 5.4.4, 6.4.4, 7.1.2, 7.1.3)

Use a Bradley test gauge (Model 269-1444) to check flow pattern. ❹

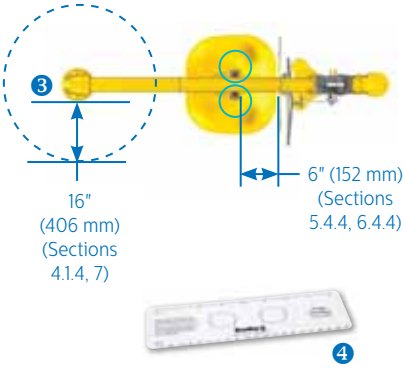

15-minute Flush	Tepid Water	Third-Party Certifications	Weekly Activations:	Annual Inspections
Compliant showers release a continuous flow of at least 20 GPM (76 L/Min) of tepid flushing fluid for a period of at least 15 minutes. (Sections 4.1.4, 4.4.1, 4.5.5, 4.5.6, 7.1.1) Compliant eye or eye/face wash fixture releases a continuous flow of flushing fluid for a minimum of 15 minutes. (Sections 5.1.6, 5.4.5, 5.4.6, 6.1.6, 6.4.5, 6.4.6, 7.1.2, 7.1.3)	(lukewarm) 60–100°F (15.6–37.8°C) encourages full 15-minute flush or until medical personnel arrive. (Definitions, Sections 4.5.6, 5.4.6, 6.4.6, Appendix B6)	Manufacturers may have their safety fixtures independently evaluated by a third-party testing organization. Look for certification when selecting a compliant fixture. (Definitions)	Flush lines and test by activating weekly. Inspection tags are often included with fixtures to document testing and to satisfy a safety audit. (Sections 4.6.2, 5.5.2, 6.5.2, 7.5.2)	ANSI recommends a comprehensive annual inspection of the facility to evaluate modified work space, assess new hazards introduced into the area, and to identify fixtures needing replacement or repair. (Section 7.5.5) (Section 4.6.5)

FREE Confidential Safety Evaluation • 800.BRADLEY • bradleysafety.com

Combination Drench Showers and Eyewash Units

S19314EW

Galvanized steel protected with BradTect corrosion-resistant yellow coating

Plastic showerhead and bowl

Eyewash exceeds minimum water flow of 0.4 GPM (1.5 L/Min) at 30 psi (207 kPa)

UL classified to meet ANSI/ISEA Z358.1

S19314EW

S19314EWZ

Same features as S19314EW except with BSPP thread

S19314EWZS

All stainless steel piping

Plastic showerhead and bowl

Eyewash exceeds minimum water flow of 0.4 GPM (1.5 L/Min) at 30 psi (207 kPa)

BSPP thread

Certified to AS4775 and AS4020

S19314EWZS

S19314P

8' (2.4 m) hand-held drench hose for body rinse

Galvanized steel protected with BradTect corrosion-resistant yellow coating

Plastic showerhead and bowl

Eyewash exceeds minimum water flow of 0.4 GPM (1.5 L/Min) at 30 psi (207 kPa)

UL classified to meet ANSI/ISEA Z358.1

S19314P

S19314PZ

Same features as S19314P except with BSPP thread

S19314SB

Galvanized steel protected with BradTect corrosion-resistant yellow coating

Plastic showerhead and stainless steel bowl

Eyewash exceeds minimum water flow of 0.4 GPM (1.5 L/Min) at 30 psi (207 kPa)

UL classified to meet ANSI/ISEA Z358.1

S19314SB

S19314SBZ

Same features as S19314SB except with BSPP thread

S19314SBZS

All stainless steel piping

Plastic showerhead and stainless steel bowl

Eyewash exceeds minimum water flow of 0.4 GPM (1.5 L/Min) at 30 psi (207 kPa)

BSPP thread

Certified to AS4775 and AS4020

S19314SBZS

S19314LL

Hand or foot operation for Eyewash

Galvanized steel protected with BradTect corrosion-resistant yellow coating

Plastic showerhead and stainless steel bowl

Eyewash exceeds minimum water flow of 0.4 GPM (1.5 L/Min) at 30 psi (207 kPa)

UL classified to meet ANSI/ISEA Z358.1

S19314LL

S19314LLZ

Same features as S19314LL except with BSPP thread

S19314LLZS

Hand or foot operation for Eyewash

All stainless steel piping

Plastic showerhead and stainless steel bowl

Eyewash exceeds minimum water flow of 0.4 GPM (1.5 L/Min) at 30 psi (207 kPa)

BSPP thread

Certified to AS4775 and AS4020

S19314LLZS

S19314F

Galvanized steel protected with BradTect corrosion-resistant yellow coating

Plastic showerhead with stainless steel shroud and stainless steel bowl

Eyewash exceeds minimum water flow of 0.4 GPM (1.5 L/Min) at 30 psi (207 kPa)

UL classified to meet ANSI/ISEA Z358.1

S19314F

S19314FZ

Same features as S19314F except with BSPP thread

S19314FZS

All stainless steel piping

Plastic showerhead with stainless steel shroud and stainless steel bowl

Eyewash exceeds minimum water flow of 0.4 GPM (1.5 L/Min) at 30 psi (207 kPa)

BSPP thread

Certified to AS4775 and AS4020

S19314FZS

S19314UU

Hand or foot operation for Eyewash

Galvanized steel protected with BradTect corrosion-resistant yellow coating

Plastic showerhead with stainless steel shroud and stainless steel bowl

Eyewash exceeds minimum water flow of 0.4 GPM (1.5 L/Min) at 30 psi (207 kPa)

UL classified to meet ANSI/ISEA Z358.1

S19314UU

S19314UUZ

Same features as S19314UU except with BSPP thread

S19314UUZS

Hand or foot operation for Eyewash

All stainless steel piping

Plastic showerhead with stainless steel shroud and stainless steel bowl

Eyewash exceeds minimum water flow of 0.4 GPM (1.5 L/Min) at 30 psi (207 kPa)

BSPP thread

Certified to AS4775 and AS4020

S19314UUZS

Combination Drench Showers and Eyewash Units with Hinged Dust Covers

S19314PDC

Galvanized steel protected with BradTect corrosion-resistant yellow coating

Plastic showerhead, bowl and dust cover

Eyewash exceeds minimum water flow of 0.4 GPM (1.5 L/Min) at 30 psi (207 kPa)

UL classified to meet ANSI/ISEA Z358.1

S19314PDC

S19314PDCZ

Same features as S19314PDC except with BSPP thread

S19314PDCZS

All stainless steel piping

Plastic showerhead, bowl and dust cover

Eyewash exceeds minimum water flow of 0.4 GPM (1.5 L/Min) at 30 psi (207 kPa)

BSPP thread

Certified to AS4775 and AS4020

S19314PDCZS

S19314DC

Galvanized steel protected with BradTect corrosion-resistant yellow coating

Plastic showerhead and stainless steel bowl and dust cover

Eyewash exceeds minimum water flow of 0.4 GPM (1.5 L/Min) at 30 psi (207 kPa)

UL classified to meet ANSI/ISEA Z358.1

S19314DC

S19314DCZ

Same features as S19314DC except with BSPP thread

S19314DCZS

All stainless steel piping

Plastic showerhead and stainless steel bowl and dust cover

Eyewash exceeds minimum water flow of 0.4 GPM (1.5 L/Min) at 30 psi (207 kPa)

BSPP thread

Certified to AS4775 and AS4020

S19314DCZS

Combination Drench Showers and Eye/Face Wash Units

S19314FW

Dual eye/face wash

Galvanized steel protected with BradTect corrosion-resistant yellow coating

Plastic showerhead and bowl

Eye/face wash exceeds minimum water flow of 3 GPM (11 L/Min) at 30 psi (207 kPa)

UL classified to meet ANSI/ISEA Z358.1

S19314FW

S19314FWZ

Same features as S19314FW except with BSPP thread

S19314FWZS

Dual eye/face wash

All stainless steel piping

Plastic showerhead and bowl

Eye/face wash exceeds minimum water flow of 3 GPM (11 L/Min) at 30 psi (207 kPa)

BSPP thread

Certified to AS4775 and AS4020

S19314FWZS

S19314SBFW

Dual eye/face wash

Galvanized steel protected with BradTect corrosion-resistant yellow coating

Plastic showerhead and stainless steel bowl

Eye/face wash exceeds minimum water flow of 3 GPM (11 L/Min) at 30 psi (207 kPa)

UL classified to meet ANSI/ISEA Z358.1

S19314SBFW

S19314SBFWZ

Same features as S19314SBFW except with BSPP thread

S19314SBFWZS

Dual eye/face wash

All stainless steel piping

Plastic showerhead and stainless steel bowl

Eye/face wash exceeds minimum water flow of 3 GPM (11 L/Min) at 30 psi (207 kPa)

BSPP thread

Certified to AS4775 and AS4020

S19314SBFWZS

S19314AC

Hand or foot operation for eye/face wash

Dual eye/face wash

Galvanized steel protected with BradTect corrosion-resistant yellow coating

Plastic showerhead and stainless steel bowl

Eye/face wash exceeds minimum water flow of 3 GPM (11 L/Min) at 30 psi (207 kPa)

UL classified to meet ANSI/ISEA Z358.1

S19314AC

S19314ACZ

Same features as S19314AC except with BSPP thread

S19314ACZS

Hand or foot operation for eye/face wash

Dual eye/face wash

All stainless steel piping

Plastic showerhead and stainless steel bowl

Eye/face wash exceeds minimum water flow of 3 GPM (11 L/Min) at 30 psi (207 kPa)

BSPP thread

Certified to AS4775 and AS4020

S19314ACZS

S19314TT

Dual eye/face wash

Galvanized steel protected with BradTect corrosion-resistant yellow coating

Plastic showerhead with stainless steel shroud and stainless steel bowl

Eye/face wash exceeds minimum water flow of 3 GPM (11 L/Min) at 30 psi (207 kPa)

UL classified to meet ANSI/ISEA Z358.1

S19314TT

S19314TTZ

Same features as S19314TT except with BSPP thread

S19314TTZS

- Dual eye/face wash
- All stainless steel piping
- Plastic showerhead with stainless steel shroud and stainless steel bowl
- Eye/face wash exceeds minimum water flow of 3 GPM (11 L/Min) at 30 psi (207 kPa)
- BSPP thread
- Certified to AS4775 and AS4020

S19314TTZS

Combination Drench Showers and Eye/Face Wash Units

S19314SPR

- Hand or foot operation for eye/face wash
- Dual eye/face wash
- Galvanized steel protected with BradTect corrosion-resistant yellow coating
- Stainless steel showerhead and bowl
- Eye/face wash exceeds minimum water flow of 3 GPM (11 L/Min) at 30 psi (207 kPa)
- UL classified to meet ANSI/ISEA Z358.1

S19314SPR

S19314SPRZ

Same features as S19314SPR except with BSPP thread

S19314SPRZS

- Hand or foot operation for eye/face wash
- Dual eye/face wash
- All stainless steel piping
- Stainless steel showerhead and bowl
- Eye/face wash exceeds minimum water flow of 3 GPM (11 L/Min) at 30 psi (207 kPa)
- BSPP thread
- Certified to AS4775 and AS4020

S19314SPRZS

S19314BFPB

- Barrier-free design — fully accessible to people with physical disabilities
- Dual eye/face wash
- Galvanized steel protected with BradTect corrosion-resistant yellow coating
- Plastic showerhead and bowl
- Eye/face wash exceeds minimum water flow of 3 GPM (11 L/Min) at 30 psi (207 kPa)
- UL classified to meet ANSI/ISEA Z358.1

S19314BFPB

S19314BFPBZ

Same features as S19314BFPB except with BSPP thread

S19314BFPBZS

- Barrier-free design — fully accessible to people with physical disabilities
- Dual eye/face wash
- All stainless steel piping
- Plastic showerhead and bowl
- Eyewash exceeds minimum water flow of 0.4 GPM (1.5 L/Min) at 30 psi (207 kPa)
- BSPP thread
- Certified to AS4775 and AS4020

S19314BFPBZS

S19314BF

- Barrier-free design — fully accessible to people with physical disabilities
- Dual eye/face wash
- Galvanized steel protected with BradTect corrosion-resistant yellow coating
- Plastic showerhead and stainless steel bowl
- Eye/face wash exceeds minimum water flow of 3 GPM (11 L/Min) at 30 psi (207 kPa)
- UL classified to meet ANSI/ISEA Z358.1

S19314BF

S19314BFZ

Same features as S19314BF except with BSPP thread

S19314BFZS

Barrier-free design — fully accessible to people with physical disabilities

Dual eye/face wash

All stainless steel piping

Plastic showerhead and stainless steel bowl

Eye/face wash exceeds minimum water flow of 3 GPM (11 L/Min) at 30 psi (207 kPa)

BSPP thread

Certified to AS4775 and AS4020

S19314BFZS

Combination Drench Showers and Eye/Face Wash Units with Hinged Dust Covers

S19314PDCFW

Dual eye/face wash

Galvanized steel protected with BradTect corrosion-resistant yellow coating

Plastic showerhead, bowl and dust cover

Eye/face wash exceeds minimum water flow of 3 GPM (11 L/Min) at 30 psi (207 kPa)

UL classified to meet ANSI/ISEA Z358.1

S19314PDCFW

S19314PDCFWZ

Same features as S19314PDCFW except with BSPP thread

S19314PDCFWZS

Dual eye/face wash

All stainless steel piping

Plastic showerhead, bowl and dust cover

Eye/face wash exceeds minimum water flow of 3 GPM (11 L/Min) at 30 psi (207 kPa)

BSPP thread

Certified to AS4775 and AS4020

S19314PDCFWZS

S19314DCFW

Dual eye/face wash

Galvanized steel protected with BradTect corrosion-resistant yellow coating

Plastic showerhead and stainless steel bowl and dust cover

Eye/face wash exceeds minimum water flow of 3 GPM (11 L/Min) at 30 psi (207 kPa)

UL classified to meet ANSI/ISEA Z358.1

S19314DCFW

S19314DCFWZ

Same features as S19314PDCFW except with BSPP thread

S19314DCFWZS

Dual eye/face wash

All stainless steel piping

Plastic showerhead and stainless steel bowl and dust cover

Eye/face wash exceeds minimum water flow of 3 GPM (11 L/Min) at 30 psi (207 kPa)

BSPP thread

Certified to AS4775 and AS4020

S19314DCFWZS

S19314DCBF

Barrier-free design – fully accessible to people with physical disabilities

Dual eye/face wash

Galvanized steel protected with BradTect corrosion-resistant yellow coating

Plastic showerhead and stainless steel bowl and dust cover

Eye/face wash exceeds minimum water flow of 3 GPM (11 L/Min) at 30 psi (207 kPa)

UL classified to meet ANSI/ISEA Z358.1

S19314DCBF

S19314DCBFZ

Same features as S19314DCBF except with BSPP thread

S19314DCBFZS

Barrier-free design – fully accessible to people with physical disabilities

Dual eye/face wash

All stainless steel piping

Plastic showerhead and stainless steel bowl and dust cover

Eye/face wash exceeds minimum water flow of 3 GPM (11 L/Min) at 30 psi (207 kPa)

BSPP thread

Certified to AS4775 and AS4020

S19314DCBFZS

Combination Drench Shower and Eye/Face Wash Units without Eyewash Bowl

S19314GG

Dual eye/face wash

Galvanized steel protected with BradTect corrosion-resistant yellow coating

Plastic showerhead and no bowl

Eye/face wash exceeds minimum water flow of 3 GPM (11 L/Min) at 30 psi (207 kPa)

UL classified to meet ANSI/ISEA Z358.1

S19314GG

S19314GGZ

Same features as S19314GG except with BSPP thread

S19314GGZS

Dual eye/face wash

All stainless steel piping

Plastic showerhead and no bowl

Eye/face wash exceeds minimum water flow of 3 GPM (11 L/Min) at 30 psi (207 kPa)

BSPP thread

Certified to AS4775 and AS4020

S19314GGZS

Frost-Proof, Wall-Mounted Combination Drench Shower and Eyewash

S19-310TW

Through-wall design

Galvanized steel protected with BradTect corrosion-resistant yellow coating

Plastic showerhead and no bowl

Available in three wall thicknesses:

S19-310TW8	0–8" (0–203 mm)
S19-310TW12	8–12" (203–305 mm) – standard
S19-310TW18	12–18" (305–457 mm)

UL classified to meet ANSI/ISEA Z358.1

S19-310TW

All Stainless Steel Combination Drench Showers and Eyewash or Eye/Face Wash Units

S19314BFSS

Barrier-free design – fully accessible to people with physical disabilities

All stainless steel fixture

Corrosion-resistant for harsh environments

Bradley's stainless steel emergency fixtures are recommended for harsh environments

UL classified to meet ANSI/ISEA Z358.1

S19314BFSS

S19314BFSSZ

Same features as S19314BFSS except with BSPP thread

Certified to AS4775 and AS4020

S19314FSS

All stainless steel fixture

Bradley's stainless steel emergency fixtures are recommended for harsh environments

Eye/face wash exceeds minimum water flow of 3 GPM (11 L/Min) at 30 psi (207 kPa)

UL classified to meet ANSI/ISEA Z358.1

S19314FSS

S19314FSSZ

Same features as S19314FSS except with BSPP thread

Certified to AS4775 and AS4020

S19314SC

All stainless steel fixture and dust cover

Bradley's stainless steel emergency fixtures are recommended for harsh environments

Eye/face wash exceeds minimum water flow of 3 GPM (11 L/Min) at 30 psi (207 kPa)

UL classified to meet ANSI/ISEA Z358.1

S19314SC

S19314SCZ

Same features as S19314SC except with BSPP thread

Certified to AS4775 and AS4020

S19314SS

Hand or foot operation for eye/face wash

All stainless steel fixture

Bradley's stainless steel emergency fixtures are recommended for harsh environments

Eye/face wash exceeds minimum water flow of 3 GPM (11 L/Min) at 30 psi (207 kPa)

UL classified to meet ANSI/ISEA Z358.1

S19314SS

S19314SSZ

Same features as S19314SS except with BSPP thread

Certified to AS4775 and AS4020

S19314SS16

Fixture is all type 316 corrosion-resistant stainless steel for harsh environments

Bradley's stainless steel emergency fixtures are recommended for harsh environments

Eye/face wash exceeds minimum water flow of 3 GPM (11 L/Min) at 30 psi (207 kPa)

UL classified to meet ANSI/ISEA Z358.1

S19314SS16

S19314SS16Z

Same features as S19314SS16 except with BSPP thread

Certified to AS4775 and AS4020

S19-310PVC

Corrosion-resistant schedule 80PVC

Stainless steel valve fittings

Plastic showerhead and bowl

Eye/face wash exceeds minimum water flow of 3 GPM (11 L/Min) at 30 psi (207 kPa)

UL classified to meet ANSI/ISEA Z358.1

S19-310PVC

Drench Showerheads

Bradley's drench showers are available with either a plastic or stainless steel showerhead. The plastic showerheads are high-visibility yellow and made of impact-resistant material. For the most durable showerhead, select stainless steel which stands up to corrosion and aggressive impact.

Eye and Eye/Face Wash Bowls

Bradley's eye and eye/face wash bowls come in two different materials – plastic and stainless steel. The high-visibility plastic bowls are intended for general use. The impact-resistant plastic will stand up to regular wear and tear. For the most durable bowl, select stainless steel bowls for rugged environments, where impact and corrosion could be a problem.

Dust Covers

The most effective way to keep the unit clean and functioning properly is to have a dust cover over the eye or eye/face wash. See-through plastic dust covers provide effective dust protection, but also allow for easy inspection. These covers automatically open when the eye or eye/face wash is activated. Dust covers are available as standard equipment on many eye and eye/face washes, or can be ordered as a retrofit kit.

Foot Treadle

Foot treadles provide hands-free activation for eye and eye/face washes. Foot treadles are available as standard equipment on some eye and eye/face washes, or can be ordered as a retrofit kit.

Flow Controls

In the interest of water conservation, each shower head features an integral 20 GPM (76 L/Min) flow control. This item must be purchased separately for most competing brands.

S19314 Series Configurator

Don't see a model that meets your application? Use the selections below to build one to suit your needs. Select one option from each category. Fill in the squares below with the corresponding option letter or number. Use the resulting alphanumeric number to specify the model and configuration for your desired product.

1 Configuration

- A 6 in (15.2 cm) Drain Height, Barrier Free
- B 24 in (61 cm) Drain Height
- C 24 in (61 cm) Drain Height, Barrier-Free
- 0 6 in (15.2 cm) Drain Height, Standard

2 Pipe Material

USA and Canada

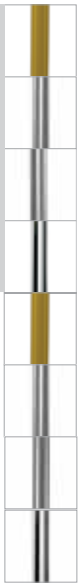

- A NPT▸, Yellow BradTect Galvanized Steel, 1.25 in (32 mm)
- B NPT▸, All 304 Stainless Steel, 1.25 in (32 mm)
- C NPT▸, All 316 Stainless Steel,* 1.25 in (32 mm)
- D NPT▸, Chrome-Plated, 1.25 in (32 mm)
- F BSPP◊, Yellow BradTect Galvanized Steel, 1.25 in (32 mm)
- G BSPP◊, All 304 Stainless Steel, 1.25 in (32 mm)
- H BSPP◊, All 316 Stainless Steel, 1.25 in (32 mm)
- J BSPP◊, Chrome-Plated, 1.25 in (32 mm)

3 Ball Valve

- 1 Stay-Open Shower and Eyewash, Chrome-Plated Brass
- 2 Stay-Open Shower and Eyewash, 316 SS
- 3 Self-Closing Shower and Stay-Open Eyewash, Chrome-Plated Brass**

4 Showerhead

- A Plastic Showerhead, 3.1 in (7.9 cm) diameter Standard
- B Plastic Showerhead, 10 in (25.4 cm) diameter Plastic Shroud
- C Plastic Showerhead, 10.75 in (27.3 cm) diameter Stainless Steel Shroud
- D 304 SS High Performance Showerhead, 1.5 in (3.8 cm) diameter
- E 316 SS High Performance Showerhead, 1.5 in (3.8 cm) diameter

5 Eyewash or Eye/Face Wash

- A Halo Eyewash
- B Halo Eye/Face Wash
- D Halo Eyewash, 304 SS Yoke
- E Halo Eye/Face Wash, 304 SS Yoke
- F Halo 304 Stainless Eye/Face Wash, 304 SS Yoke***
- G Halo Eyewash, 316 SS Yoke
- H Halo Eye/Face Wash, 316 SS Yoke
- J Halo 316 Stainless Eye/Face Wash, 316 SS Yoke***

6 Bowl and Dust Cover

- A Plastic Bowl, No Dust Cover
- B Plastic Bowl, Plastic Dust Cover
- D 304 SS, No Dust Cover
- E 304 SS, 304 SS Dust Cover
- F 304 SS, Plastic Dust Cover
- G 316 SS, No Dust Cover
- H 316 SS, 316 SS Dust Cover
- J 316 SS, Plastic Dust Cover
- 0 No Bowl or Dust Cover

7 Activation

- A 300 SS Handle
- B 316 SS Handle
- C 300 SS Handle with 300 SS Foot Pedal *
- D 300 SS Handle with 316 SS Foot Pedal *
- E 316 SS Handle with 316 SS Foot Pedal *

8 Drench Hose and Back-flow Prevention

- A Drench Hose Kit with Vacuum Breaker
- B Drench Hose Kit with N9 Back-flow Preventer
- C Drench Hose Kit with 9D Back-flow Preventer
- D Drench Hose Kit without Back-flow Preventer
- 0 No Drench Hose and No Back-flow Prevention
- Z Drench Hose Ready

9 Freeze and Scald Protection

- N Anti-Freeze Valve
- P Anti-Scald Valve
- R Anti-Freeze and Anti-Scald Valves
- 0 No Anti-Freeze Valve and No Anti-Scald Valve
- Z Anti-Freeze and Anti-Scald Valve Ready

▸ *NPT (National Pipe Thread).*

◊ *BSPP (British Standard Pipe Parallel Threads)*

* *Not available with barrier-free configurations.*

** *Self-closing valves are not ANSI/ISEA Z358.1 compliant.*

***Must select stainless steel pipe and ball valve when stainless steel eye/face wash is required.*

Fill in 1 through 9 to specify the Halo model and configuration for your desired project:

						1	2	3	4	5	6	7	8	9
S	1	9	3	1	4									

Model S19-304GATL
General Area with
Indicator Lights

NEW!

S19-304 Series

Overview

Bradley Heat Trace Showers are engineered to ensure water doesn't freeze in the fixture, down to -50°F (-46°C). These durable freeze protected showers help keep employees safe in extreme, frigid environments. The high-visibility fixture is insulated and covered by a yellow plastic shell, it features an integral freeze protection bleed valve, and is electrically rated for use in General Area, Class I Division 2, Class I Division 1, and Class II Division 1 and 2 locations.

Heat trace fixtures are available with an optional signaling system, indicator light, extension cable, drench hose, stainless steel material, and anti-scald valve.

Key Features

- General area and hazardous location models
- Freeze protection valve ensures continual flow of water should power fail
- SpinTec showerhead improves water distribution
- Halo Eyewash technology delivers the most effective washdown coverage
- Bowl and dust cover always included
- Classified by Underwriters Laboratories Inc to ANSI Z358.1

Emergency Fixture Facts

In geographic areas where an emergency fixture may freeze, safety personnel should consider purchasing a freeze-protected fixture or additional accessories to prevent the pipes from freezing. ANSI/ISEA Z358.1 Section 6.4.5

Recommended Emergency TMV

Navigator EFX 25 (S19-2100)

The current ANSI standard calls for emergency Eyewashes and drench showers to deliver tepid water (60–100°F/ 15.5–37.7°C) for 15 minutes. A thermostatic mixing valve is needed to mix the hot and cold water supply. Bradley's Navigator TMVs are the most reliable emergency TMVs on the market. One valve is required per plumbed unit.

S19-304GAT

For use in general areas where temperatures fall below freezing

120 VAC protects until from freezing down to -50° F (-46°C)

1¼" NPT (top supply)

1¼" galvanized steel pipe

3.1" (78.7mm) diameter, impact-resistant plastic SpinTec Showerhead

Halo Eye/Face Wash

ABS Plastic Halo Eye/Face Wash

Ergonomic hand activation Eyewash paddle

S19-304GAT

S19-304D2T

For use in Class I Division 2 areas where temperatures fall below freezing

120 VAC protects until from freezing down to -50° F (-46°C)

1¼" NPT (top supply)

1¼" galvanized steel pipe

3.1" (78.7mm) diameter, impact-resistant plastic SpinTec Showerhead

Halo Eye/Face Wash

ABS Plastic Halo Eye/Face Wash

Ergonomic hand activation Eyewash paddle

S19-304D2T

S19-304GAB

Same features as S19-304GAT except with bottom water supply

S19-304D2B

Same features as S19-304GAT except with bottom water supply

S19-304GATL

For use in general areas where temperatures fall below freezing

120 VAC protects until from freezing down to -50° F (-46°C)

1¼" NPT (top supply)

1¼" galvanized steel pipe

3.1" (78.7mm) diameter, impact-resistant plastic SpinTec Showerhead

Halo Eye/Face Wash

ABS Bowl and dust cover (transparent cover)

Ergonomic hand activation Eyewash paddle

General Area Indicator Lights

S19-304GATL

S19-304D2TL

For use in Class I Division 2 areas where temperatures fall below freezing

120 VAC protects until from freezing down to -50° F (-46°C)

1¼" NPT (top supply)

1¼" galvanized steel pipe

3.1" (78.7mm) diameter, impact-resistant plastic SpinTec Showerhead

Halo Eye/Face Wash

ABS Plastic Halo Eye/Face Wash

Ergonomic hand activation Eyewash paddle

Class I Division 2 Indicator Lights

S19-304D2TL

S19-304GABL

Same features as S19-304GATL except with bottom water supply

S19-304D2BL

Same features as S19-304D2TL except with bottom water supply

Heat Trace Combination Drench Shower and Eye/Eye-Face Wash

S19-304 Series Features

- **Electric heat trace cable:**
  - Thermal rating 5 watts/foot
  - Self regulated to -50˚F (-45.5˚C)
  - Protects against overheating and cold spots
  - ¾" (19 mm) polyethylene pipe insulation
- **Insulated and covered by high-visibility yellow ABS plastic shell**
  - Easy to maintain
  - Six easy-to-remove sections
- NEMA 4X rated electrical enclosure
- Signaling Systems can be easily added to all units
- Thermostat opens at 64˚F (18˚C) and closes at 54˚F (12˚C)
- Four-hub, aluminum junction box accepts ¾" (19 mm) conduit for hazardous locations
- Plastic junction box with one extra ¾" conduit hole for General Area locations
- Freeze valve opens at 35˚F (2˚C) internal water temperature to prevent freezing
- Stainless steel pull rod with triangular handle
- Chrome-plated brass, stay-open ball valve
- ½" (13 mm) Eyewash valve
- 1" (25 mm) shower valve
- UL Plumbing listed to meet ANSI/ISEA Z358.1
- CSA electrical certification for use in United States and Canada (cCSAus)

Additional product information, including Technical Data and Installation Instructions, is available online at bradleycorp.

Standard selections are in bold.

Selection should be made in each category. Incoming supply (top or bottom) must be indicated.

Electrical Class

☐	**GA**	**General Area**
☐	**D2**	**Class I Div 2 – Groups B, C, D**
☐	D1	Class I Div 1 – Groups C, D
☐	C2	Class II Div 1 and 2– Groups E, F & G

Voltage

☐	**V1**	**120V**
☐	V4	240V

Water Supply

☐	T	Top Supply
☐	B	Bottom Supply

Pipe and Ball Valve Material

☐	**GLV**	**Galvanized Pipe and Chrome-Plated Brass Ball Valve**
☐	304	304SS Pipe, 316 SS Ball Valve
☐	316	316SS Pipe, 316 SS Ball Valve

Showerhead

☐	**SH**	**ABS Plastic Showerhead**
☐	SHP	ABS Plastic Showerhead with Plastic Shroud
☐	SHS	ABS Plastic Showerhead with SS Shroud
☐	S04	304 SS Showerhead
☐	S16	316 SS Showerhead

Eyewash

☐	EW	ABS Plastic Eyewash Only Aluminum Yoke
☐	**FW**	**ABS Plastic Eye/Face Wash, Aluminum Yoke**
☐	F04	304 SS Eye/Face Wash, 304 SS Yoke*
☐	F16	316 SS Eye/Face Wash, 316 SS Yoke*

Bowl and Cover

☐	**PP**	**Plastic Bowl and Cover**
☐	B04	304 SS Bowl and Cover
☐	P04	304 SS Bowl and Plastic Cover
☐	B16	316 SS Bowl and Cover
☐	P06	16 SS Bowl and Plastic Cover

Activation

☐	**HA**	**300 Series Handle Activation**
☐	H16	316 SS Handle Activation
☐	HF	300 Series Handle & Foot Activation
☐	HF16	316SS Handle and Foot Activation

Indicator Light

☐	**0**	**No Light**
☐	L	General Area Light
☐	D2L	Class I, Division 2 Light
☐	D1L	Class I, Division 1 Light
☐	C2L	Class II Light

Drench Hose

☐	**0**	**No Drench Hose**
☐	H	Drench Hose

Anti-Scald Valve

☐	**0**	**No Anti-Scald Valve**
☐	S	Anti-Scald Valve

Extension Cable

☐	**0**	**No Extension Cable**
☐	E	Extension Cable

**Must select stainless steel yoke if ordering 304 or 316 stainless steel pipe.*

Recommended Option:

S19-324 Series Signaling Systems (pg 56)

According to ANSI guidelines, audible signaling systems may be a desirable accessory to audibly or electronically alert safety personnel that an emergency occurred. (ANSI/ISEA Z358.1)

INDOOR & OUTDOOR MODELS

Overview

Protect your people from extreme environments with a customized safety solution. Turnkey shower, Eyewash and drench hose systems offer an injured party a humane triage experience. Enclosed safety systems address the physical and psychological needs of the injured party by providing privacy, delivering warm water, warm ambient temperature and a shelter from the elements. Armed with a fire-rated insulated fiberglass structure, tepid water delivery capabilities, and reliable chemical and corrosion resistance, Bradley's enclosed safety shower provides superior washdown capability in emergency situations, while withstanding harsh chemicals.

Key Features

- Innovative drenching technology featuring:
  SpinTec showerhead for improved water distribution
  Halo rinsing platform
- **Superior design standards:**
  Fiberglass-Reinforced Plastic
  R-8 insulation rating
  Indoor and Outdoor models
- **Premium features come standard:**
  Integral drain
  Portable
  Drench hose
- Flame-retardant resin with a Class 1 Flame Spread Index per ASTM E-84
- 100% fiberglass surround construction highly resistant to chemicals and corrosion
- Ideal for both indoor and outdoor applications
- Custom engineered systems available

Emergency Fixture Facts

Safety systems with multiple drenching platforms, (shower, Eyewash and drench hose) must be capable of simultaneous activation while delivering tepid water for a duration of 15 minutes. ANSI/ISEA Z358.1 Section 7.4.4

An enclosure is recommended to protect against cold ambient temperatures. ANSI/ISEA Z358.1 Appendix B6

S19372

S19388

Indoor Enclosed Safety Showers

S19372 SERIES

Tepid water inlet

S19374 SERIES

Hot water tank

S19378 SERIES

Tankless hot water heater

Outdoor Enclosed Safety Showers

S19382 SERIES

Tepid water inlet

S19384 SERIES

Hot water tank

S19387 SERIES

Self-contained

S19388 SERIES

Tankless hot water heater

Quick Compliance Guide

This guide serves as a supplement to the ANSI/ISEA Z358.1-2014 standard.

Enclosed Safety Showers

- Colder ambient temperature may require an enclosure for added protection. (Section B6)
- Valve mechanism opens in one second or less; it stays open until manually closed. (Sections 4.2, 5.2, 6.2, 7.1.1, 7.1.2, 7.1.3)
- Drench shower and eye or eye/face wash must operate simultaneously. (Section 7.4.4)
- Supply with flushing fluid ("potable water, preserved water, preserved buffered saline solution or other medically acceptable solution…"). (Definitions, Sections 4.1.1, 4.4.1, 5.1.1, 6.1.1, 7.1.2, 7.1.3)
- Locate 10 seconds or 55' (16.8 m) from contaminants or hazardous materials. Locate on same plane as the hazard, free of obstructions. (Sections 4.5.2, 5.4.2, 6.4.2, 7.1.1, 7.1.2, 7.1.3, 7.4.2, Appendix B5)
- Must resist corrosion in the presence of flushing fluid (Sections 4.1.5, 5.1.5, 6.1.5, 7.1.1, 7.1.2, 7.1.3)
- Protect eye and eye/face wash heads from contaminants. (Sections 5.1.3, 6.1.3, 7.1.2, 7.1.3)
- Requires a 16" (406 mm) radius from the center of the drench shower spray pattern to be free of obstructions. (Sections 4.1.4, 7.1.1)
- Required to be free of obstructions a minimum of 6" (152 mm) from the outside of the eye or eye/face wash sprayheads. (Sections 5.4.4, 6.4.4, 7.1.2, 7.1.3)
- Eye/face wash nozzle height 33–45" (83.8-114.3 cm) from standing surface. (Sections 5.4.4, 6.4.4, 7)
- Flow Rates:
  An Eyewash delivers a minimum of .4 GPM for 15 minutes. (Sections 5.1.6, 7.1.2)
  An eye/face wash delivers a minimum of 3.0 GPM (11 L/Min) for 15 minutes. (Sections 6.1.6, 7.1.3)
- Use flow meter to check flow rate; use test gauge to test flow pattern. (Sections 5.1.8, 5.3.1, 6.1.7, 6.3, 7.1.2, 7.1.3)
- Use a Bradley test gauge (Model 269-1444) to check flow pattern. ❶
- Environmental conditions often require freeze or scald protection equipment. (Sections 4.5.5, 5.4.5, 6.4.5, 7.1.1, 7.1.2, 7.1.3)

Top down view

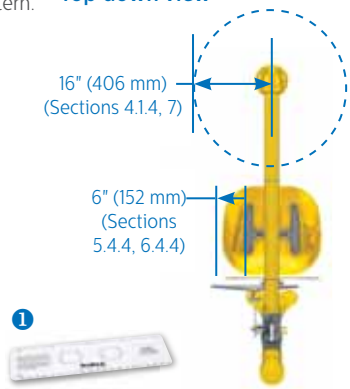

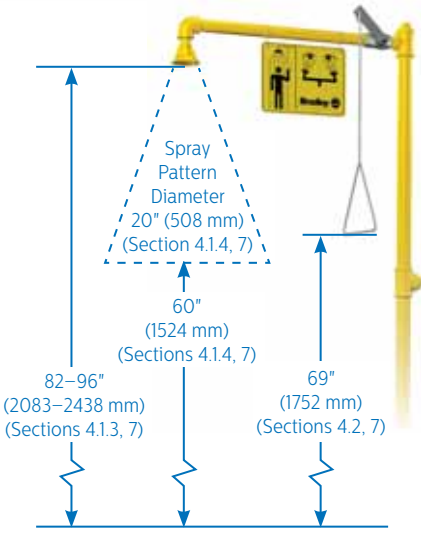

15-minute Flush	Tepid Water	Third-Party Certifications	Weekly Activations:	Annual Inspections
Compliant showers release a continuous flow of at least 20 GPM (76 L/Min) of tepid flushing fluid for a period of at least 15 minutes. (Sections 4.1.4, 4.4.1, 4.5.5, 4.5.6, 7.1.1) Compliant eye or eye/face wash fixture releases a continuous flow of flushing fluid for a minimum of 15 minutes. (Sections 5.1.6, 5.4.5, 5.4.6, 6.1.6, 6.4.5, 6.4.6, 7.1.2, 7.1.3)	(Lukewarm) 60–100°F (15.6–37.8°C) encourages full 15-minute flush or until medical personnel arrive. (Definitions, Sections 4.5.6, 5.4.6, 6.4.6, Appendix B6)	Manufacturers may have their safety fixtures independently evaluated by a third-party testing organization. Look for certification when selecting a compliant fixture. (Definitions)	Flush lines and test by activating weekly. Inspection tags are often included with fixtures to document testing and to satisfy a safety audit. (Sections 4.6.2, 5.5.2, 6.5.2, 7.5.2)	ANSI recommends a comprehensive annual inspection of the facility to evaluate modified work space, assess new hazards introduced into the area, and to identify fixtures needing replacement or repair. (Section 7.5.5) (Section 4.6.5)

FREE Confidential Safety Evaluation • 800.BRADLEY • bradleysafety.com

Eye/Face Wash and Shower Models

Overview

The safety of your employees is paramount. Keltech electric tankless emergency water heaters control systems are engineered to ensure that water temperature is just right – not too hot, not too cold. Under constant flow and pressure, temperatures stay within +/-1°F of set point. If the flow rate changes drastically, there is no need to worry about being scalded. These units sense the transition and purge latent heat, keeping the output temperature below 90°F (32°C). A separate set of circuits monitors for "over temperature" conditions. Large internal passageways minimize pressure drop.

These units perform on demand for efficient energy usage. Unlike boilers, tankless water heaters only draw energy when needed. Utility costs are minimized because there is no need to keep a 300 gal (1136 L) tank heated 24/7/365. Easy to install – just add water and power. All you need is one electrical connection and a cold water line. All models are precision-engineered with materials, such as copper tubing and robust brass castings, that exceed the standards of any application – anywhere in the world.

Key Features

- No need to keep a 300 gal (1136 L) tank heated 24/7/365
- Easy to install – just add water and power. All you need is one electrical connection and a cold water line
- Under constant flow and pressure, temperatures stay within +/-1°F of set point
- Precision systems custom engineered to fit your application
- Meets ANSI/ISEA Z358.1 standards and third-party verified to UL/CSA standards
- Only electric tankless tempering systems that can be ASME and NB certified
- Optional features include NEMA 4X stainless steel enclosures, explosion proof purge system, and freeze protection to -20°F (-28°C)

Emergency Fixture Facts

ANSI requires that an emergency fixture be supplied with tepid flushing fluid between 60-100°F (15.5-37.7°C) to avoid premature cessation of the recommended 15 minute flush. ANSI/ISEA Z358.1 Section 7.4.5, Appendix B6

Brass/Copper heat exchangers meet NSF/ANSI 372

ASME Certification: Keltech units 63 kW and higher are the only electric tankless water heaters registered with the National Board and certified with the HLW stamp

For information contact your Bradley Representative or visit bradleycorp.com

For Safety Eye/Face Wash Applications

CLE SERIES

kW Range 18 – 25 kW

Flow Range 0.75 – 10 GPM (3 – 37.8 L/Min)

Standard Voltages 480V, 600V 3-Phase Delta

Temperature output fixed at 80˚F (27˚C)

Meets the ANSI/ISEA Z358.1 standards

Provide continuous tepid water for multiple incidents with zero recovery time and custom-tuned for minimal overshoot

85,000 - 170,000 BTUs

Manual reset cutoff

Auto reset high limit switch

Liquid-cooled solid state relays

NEMA 4 enclosure

Wall- or floor-mounted

¾" (19 mm) connections

ETL and cETL certified to UL and CSA Standards

Temperature safety values:
Controller alarm 90˚F (32˚C)
Auto reset high limit switch 95˚F (35˚C)
Manual reset cutoff 100˚F (38˚C)

SNA SERIES

kW Range 36 – 144 kW

Flow Range 1.5 – 50 GPM (5.7 – 189.2 L/Min)

Standard Voltages 480V, 600V 3-Phase Delta

Temperature output fixed at 80˚F (27˚C)

Meets the ANSI/ISEA Z358.1 standards

Provide continuous tepid water for multiple incidents with zero recovery time and custom-tuned for minimal overshoot

Dual flow activation for reduced overshoot and energy savings

122,800 – 491,300 BTUs

Manual reset cutoff

Auto reset high limit switch

Door cutoff switch

Emergency stop button

Liquid-cooled solid state relays

NEMA 4 enclosure

Floor-mounted

1¼" (32 mm) connections

ETL and cETL certified to UL and CSA Standards

Temperature safety values:
Controller alarm 90˚F (32˚C)
Auto reset high limit switch 95˚F (35˚C)
Overshoot purge 95˚F (35˚C)
Manual reset cutoff 100˚F (38˚C)

For Safety Shower Applications

S19361

Pre-assembled safety fixture and SNA heater skid system

Halo™ Eye/Face Wash and SpinTec™ Drench Shower

54 - 144 kW (491,300 BTUs)

Molded Duragrate® and integrated shower pan

Temperature overshoot purge system

NEMA 4 enclosure standard

AL3 building communication alarm included

Dual Flow Heater Activation (Eye/Face Wash and/or Shower)

Internal fusing (included) adds safety and permits single power connection

Controller-locked temperature setting, output fixed at 80˚F (27˚C)

Meets ANSI/ISEA Z358.1 standards

ETL and cETL certified to UL and CSA Standards

Emergency stop button and door cutoff switch

S19361HF NEW!

Pre-assembled, freeze-protected safety fixture and SNA heater skid system

Bradley Halo Heat Trace S19-304 with SpinTec™

54 - 144 kW (491,300 BTUs)

Molded Duragrate® and integrated shower pan

Temperature overshoot purge system

NEMA 4 heat enclosure standard

AL3 building communication alarm option included

Dual Flow Heater Activation (Eye/Face Wash and/or Shower)

Internal fusing (included) adds safety and permits single power connection

Controller-locked temperature setting, output fixed at 80˚F (27˚C)

Meets ANSI/ISEA Z358.1 standards

ETL and cETL certified to UL and CSA Standards

Emergency stop button and door cutoff switch

Emergency Thermostatic Mixing Valves

Overview

Bradley's Navigator® emergency thermostatic mixing valves provide tepid water (60–100°F/15.5°–37.7°C) by mixing cold and hot water to a predetermined temperature. Tepid water encourages injured workers to remain beneath the deluge of water released from the emergency fixture, for the entire ANSI required 15-minute flush. ANSI/ISEA Z358.1-1998 first required tepid water and the 2004 standard outlined that definition of the temperature range in its appendix. Each Navigator Emergency TMV features a fixed cold-water bypass that will allow cold water to flow should the hot water exceed the predetermined temperature reflecting Bradley's commitment to customers, quality and its dedication to manufacturing quality products that protect your employees.

Key Features

- Reliable, liquid-filled thermostat
- Accurate temperature control to within ±3°
- Dial thermometer
- Checkstops on inlets
- Built-in cold water bypass
- Positive shut-off of hot supply when cold supply is lost
- Dirt and lime resistant
- Factory assembled and tested
- Universal mounting capability
- Valves are preset at 85°F (29°C) and are adjustable from 65°F (18°C) to 95°F (35°C)
- All items comply with ANSI/ISEA Z358.1

S19-2000 EFX8

S19-2100 EFX25

S19-2300 EFX125

Emergency Fixture Facts

ANSI requires that an emergency fixture be supplied with tepid flushing fluid between 60–100°F (15.5°–37.7°C). ANSI/ISEA Z358.1 Section 7.4.5, Appendix B6

Thermostatic Mixing Valves

S19-2000 *	7 GPM (26 L/Min) @ 30 psi (207 kPa)	Accommodates one Eyewash or eye/ face wash
S19-2100	26 GPM (98 L/Min) @ 30 psi (207 kPa)	Accommodates one combination shower, one drench shower or multiple Eyewashes
S19-2150 *	19.5 GPM (74 L/Min) @ 30 psi (207 kPa)	Accommodates one drench shower or multiple Eyewashes
S19-2200	53.5 GPM (203 L/Min) @ 30 psi (207 kPa)	Accommodates up to two combination showers, two drench showers or multiple Eyewashes
S19-2250 *	48 GPM (182 L/Min) @ 30 psi (207 kPa)	Accommodates one combination shower, up to two drench showers or multiple Eyewashes
S19-2300	82 GPM (310 L/Min) @ 30 psi (207 kPa)	Accommodates up to three combination showers, three drench showers or multiple Eyewashes
S19-2350 *	72.5 GPM (274 L/Min) @ 30 psi (207 kPa)	Accommodates up to two combination showers, three drench showers, or multiple Eyewashes

ANSI Standard Z358.1 requires tempered water supply. Ratings provided at 30 psi (207 kPa), the minimum pressure required by ANSI/ISEA Z358.1 to be supplied to Eyewash, eye/face wash and combination units. Reference Bradley's Technical Data Sheets for a full listing of flow capacities.

* ASSE 1071 and cUPC certified

Additional Product Options

Finish	
R	Rough Brass (Standard)
C	Chrome-plated
Piped Assembly	
P*	Piped assembly with inlet and outlet shutoff
N*	Piped assembly only
Cabinets	
SS	Surface-mounted stainless steel
RS	Recessed stainless steel
SE	Surface-mounted white enamel
RE	Recessed white enamel
W	Plexiglas® window in door

* Option not available with S19-2000.
Standard with cabinet-mounted valves.

Navigator Skid Systems

The Bradley Navigator Skid is engineered for industrial applications that need a skid-mounted, TMV based tepid water system. The flexible design allows for recirculation system, booster pump, and larger storage tank options. One supply inlet and one power supply connection provide a tepid water system for one or more emergency Eyewash or drench showers.

MODEL: NTS1
General Area or Class I Division 2 Electrical Class
208V, 240, or 480V Supply Voltage
119-gallon standard or ASME Hot Water Tank
Optional Pressure Booster Pump, Recirculation Pump, Return Line, and Aquastat

MODEL: NTS2
General Area or Class I Division 2 Electrical Class
208V, 240, or 480V Supply Voltage
318-gallon ASME Hot Water Tank
Optional Pressure Booster Pump, Recirculation Pump, Return Line, and Aquastat

Emergency Signaling Systems

Overview

Whether your intent is to prevent vandalism caused by false activations, or to be sure your safety team and medical personnel are notified during an emergency, signaling systems may be the solution. Each Bradley signaling system is equipped with a double pole, double throw flow switch. To complement the audible and visual indicator, each flow switch and central control board provides extra sets of contacts necessary to connect the fixture to a central control system that monitors the fixture. Signaling systems provide peace of mind, they discourage vandals, yet notify safety personnel when and where an emergency occurs.

Key Features

- Automatic, audible and visual system
- Signal light and horn activate when shower or Eyewash is activated; pre-assembled
- Optional beacon or area lights
- Optional silence switch with auto reset
- Universal AC Input: 90-264 AC, 50-60 Hz
- Requires a minimum of 2.4 GPM (9 L/Min) water flow to activate
- ½" (13 mm) or 1¼" (32mm) NPT inlet piping
- Double pole, double throw flow switch

Emergency Fixture Facts

According to ANSI guidelines, audible signaling systems may be a desirable accessory to audibly or electronically alert safety personnel that an emergency occurred. ANSI/ISEA Z358.1, Appendix B4

Don't see the product you are looking for? Go to pages 60–62 to use the S19-324 Configurators

S19-322 Series

- Recessed signaling system
- Automatic, audible and visual signal system
- Signal light and horn activate when shower or eye wash is activated; preassembled
- ½" (13mm) or 1¼" (32mm) NPT inlet piping
- Double pole, double throw flow switch
- For indoor applications
- Universal AC Input: 90-264 AC, 50-60 Hz
- NEMA 1 signaling system

S19-322E

UL listed ½" (32mm) flow switch

Flashing amber LED signal light

For eye or eye/face washes

S19-322E

S19-322D

UL listed 1¼" (32mm) flow switch

Flashing amber LED signal light

For drench showers or combination units

S19-322D

S19-323 Series

- Automatic, audible and visual signaling system
- Signal light and horn activate when Eyewash or shower is activated; preassembled
- Requires a minimum of 2.4 GPM (9 L/Min) water flow to activate
- ½" (13 mm) or 1¼" (32mm) NPT inlet piping
- Double pole, double throw flow switch
- For indoor and outdoor applications
- Extra set of contacts on central control board
- 6' (1.8 m) cable
- Universal AC Input: 90-264 AC, 50-60 Hz
- NEMA 3R signaling system

S19-323E

UL listed ½" (13 mm) brass flow switch

For eye or eye/face wash

Amber signal light

S19-323E

S19-323D

UL listed 1¼" (32mm) brass flow switch

For drench shower or combination units

Amber signal light

S19-323D

S19-324 Series

- Automatic, audible and visual signaling system
- Signal light and horn activate when eye wash or shower is activated; pre-assembled
- Requires a minimum of 2.4 GPM (9 L/Min) water flow to activate
- ½" (13 mm) or 1¼" (32mm) NPT inlet piping
- Double pole, double throw flow switch
- For indoor and outdoor applications
- Extra set of contacts on central control board
- Universal AC Input: 90-264 AC, 50-60 Hz

S19-324E

Brass UL listed ½" (13mm) flow switch
NEMA 4X signaling system
6' (1.8 m) Cable
For eye or eye/face wash
Silence switch with auto reset
Amber signal light

S19-324E

S19-324D

Brass, UL listed 1¼" (32 mm) flow switch
NEMA 4X signaling system
6' (1.8 m) Cable
For drench showers or combination units
Silence switch with auto reset
Amber signal light

S19-324D

S19-324DG, S19-324DGW

Brass UL listed 1¼" (32 mm) flow switch
NEMA 4X signaling system
6' (1.8 m) Cable
Silence switch with auto reset
Green beacon light
White area light (S19-324DGW only)
For drench showers or combination units
Amber signal light

S19-324DGW

S19-324EG, S19-324EGW

UL listed ½" (13mm) brass flow switch
NEMA 4X signaling system
6' (1.8 m) Cable
Silence switch with auto reset
Green beacon light
White area light (S19-324EGW only)
For eye wash or eye/face washes
Amber signal light

S19-324EG

S19-324EGW

Explosion-Proof Emergency Signaling System (Class 1 Division 2, Groups B, C & D)

S19-324D2D

NEMA 4X
Brass UL listed 1¼" (32 mm) flow switch
For drench shower or combination units
Amber signal light
S19-324D2DHT for S19-304 heat trace combination units

S19-324D2D

Explosion-Proof Emergency Signaling System (Class 1 Division 1, Groups C & D)

S19-324D1D

NEMA 4X
Brass UL listed 1¼" (32 mm) flow switch
For drench shower or combination units
Amber signal light
S19-324D1DHT for S19-304 heat trace combination units

S19-324D1D

Flow Switches

S19-319B2

Brass

½" (13 mm) NPT

Activates Eyewash and eye/face wash units

S19-319B2

S19-319S2

Stainless steel

½" (13 mm) NPT

Activates Eyewash and eye/face wash units

S19-319S2

S19-319B4

Brass

1¼ NPT

Activates combination units

S19-319B4

S19-319S4

Stainless steel

1¼ NPT

Activates combination units

S19-319S4

For availability on a brass or stainless steel flow switch only, contact Bradley Customer Service at 800-BRADLEY (800.272.3539)

S19-324 Series Configurator

Don't see a model that meets your application? Use the selections below to build one to suit your needs. Select one option from each category. Fill in the squares below with the corresponding option letter or number. Use the resulting alphanumeric number to specify the model and configuration for your desired product.

Model S19-324

General Area, NEMA4X, Signal System

1 Fixture Configuration

EF	Eye or Eye/Face Wash
DC	Drench or Combination
HT	Halo Heat Trace Combination Unit*

2 Activation

BS	Brass Flow Switch
SS	Stainless Steel Flow Switch

3 Horn Sound

TN1	Tone 1
TN2	Tone 2
TN3	Tone 3

4 Silence Switch

0	None
PM	Panel Mount
FM	Flex Mount with 15' Cable

5 Signal Light

SA	Amber (Flashing)
SR	Red (Flashing)

6 Beacon Light

0	None
BG	Green (Steady)
BB	Blue (Steady)

7 Area Light (Steady)

0	None
AW	White (Steady)
AR	Red (Steady)

8 Cable Length (Flow Switch to Signaling System)

C6	6' Cable
C12	12' Cable
C50	50' Cable

* Signaling system can only be mounted to new style S19-304 Halo Heat Trace Combination Unit

Fill in 1 through 8 to specify the model and configuration for your desired project:

						1	2	3	4	5	6	7	8
S	1	9	3	2	4								

S19-324D1 Series Configurator

Don't see a model that meets your application? Use the selections below to build one to suit your needs. Select one option from each category. Fill in the squares below with the corresponding option letter or number. Use the resulting alphanumeric number to specify the model and configuration for your desired product.

Model S19-324D1

Class I, Division 1, Groups C, and D Signal System

1 Fixture Configuration

EF	Eye or Eye/Face Wash
DC	Drench or Combination
HT	Halo Heat Trace Combination Unit*

2 Mounting

PT	Pipe Mount
WM	Wall Mount

3 Activation

BS	Brass Flow Switch
SS	Stainless Steel Flow Switch

4 Horn Sound

TS	Standard Single Tone
TM	Multi-Tone (Installer Mounted)

5 Silence Switch

0	None
RS	Reset Switch

6 Signal Light

SA	Amber (Flashing)
SR	Red (Flashing)

7 Beacon Light

0	None
BG	Green (Steady)
BB	Blue (Steady)

8 Area Light

0	None
AW	White (Steady)
AR	Red (Steady)

9 Cable Length

C6	6' Cable
C12	12' Cable
C50	50' Cable

* Signaling system can only be mounted to new style S19-304 Halo Heat Trace Combination Unit

Fill in 1 through 10 to specify the model and configuration for your desired project:

								1	2	3	4	5	6	7	8	9	10
S	1	9	3	2	4	D	1										

S19-324D2 Series Configurator

Don't see a model that meets your application? Use the selections below to build one to suit your needs. Select one option from each category. Fill in the squares below with the corresponding option letter or number. Use the resulting alphanumeric number to specify the model and configuration for your desired product.

Model S19-324D2

Class I, Division 2, Groups B, C, and D Signal System

1 Fixture Configuration

EF	Eye or Eye/Face Wash
DC	Drench or Combination
HT	Halo Heat Trace Combination Unit*

2 Activation

BS	Brass Flow Switch
SS	Stainless Steel Flow Switch

3 Horn Sound

TS	Standard Single Tone
TM	Multi-Tone (Installer Mounted)

4 Silence Switch

* For use in gas groups C, D only

O	None
RS	Reset Switch

6 Signal Light

SA	Amber (Flashing)
SR	Red (Flashing)

7 Beacon Light

O	None
BG	Green (Steady)
BB	Blue (Steady)

8 Area Light

O	None
AW	White (Steady)
AR	Red (Steady)

9 Cable Length

C6	6' Cable
C12	12' Cable
C50	50' Cable

* Signaling system can only be mounted to new style S19-304 Halo Heat Trace Combination Unit

Fill in 1 through 9 to specify the model and configuration for your desired project:

								1	2	3	4	5	6	7	8	9
S	1	9	3	2	4	D	2									

S19-460, S19-430 and S19-440 Series

Overview

Bradley deck-mounted or wall-mounted, dual head drench hoses qualify as an Eyewash when installed according to the ANSI/ISEA Z358.1 guidelines for Eyewashes. A dual head drench hose may be used to flush the eyes or body. In contrast, several single head drench hose models exist exclusively for the purpose of serving as auxiliary safety equipment during an emergency. Single head drench hoses may be deck-mounted, wall-mounted or installed as a retrofit in line with an already existing Eyewash or drench shower in particularly hazardous locations.

Key Features

- Plastic eye/face wash sprayheads
- 8' (2.4 m) drench hose standard (except where noted)
- Squeeze-activated handle (except where noted)
- Locking clip – continuous water flow once activated
- Deck-mounted models include deck mounting hardware
- Wall-mounted models include wall mounting hardware (except where noted)
- All items comply with ANSI/ISEA Z358.1

Emergency Fixture Facts

Dual head drench hoses may take the place of a traditional Eyewash if it complies with all Eyewash performance requirements in Section 5 and/or Section 6 of the standard such as being mounted 6" (152 mm) from any obstruction and 33-53" (838–1346 mm) from the top of the spray pattern to the floor. ANSI/ISEA Z358.1 Section 8.2.1

Back-flow Preventers

To select the appropriate back-flow preventer, check with local governing authorities on local codes and ordinances.

Recommended Emergency TMV

Navigator EFX 8 (S19-2000)

The current ANSI standard calls for emergency Eyewashes and drench showers to deliver tepid water (60–100°F/15.5–37.7°C) for 15 minutes. A thermostatic mixing valve is needed to mix the hot and cold water supply. Bradley's Navigator TMVs are the most reliable emergency TMVs on the market. One valve is required per plumbed unit.

Quick Compliance Guide

This guide serves as a supplement to the ANSI/ISEA Z358.1-2014 standard.

Dual Head Eye/Face Wash & Drench Hose

- Considered an eye/face wash if it complies with the installation and performance requirements of the eye/face wash standard. (Sections 6, 8.2.1)
- Single-head drench hoses complement the 15-minute flush provided by a primary ANSI/ISEA Z358.1 compliant Eyewash fixture. (Section 8)
- Valve mechanism opens in one second or less; it stays open until manually closed. (Sections 6.2, 8.2.1)
- Fixtures compliant as an eye/face wash must remain "on" once activated (Sections 6.2, 8.2.1) ❶
- Supply with flushing fluid ("potable water, preserved water, preserved buffered saline solution or other medically acceptable solution...") (Definitions, Sections 6.1.1, 8.2.1) ❷
- Locate 10 seconds or 55' (16.8 m) from contaminants or hazardous materials. Locate on same plane as the hazard, free of obstructions. (Section 6.4.2, Appendix B5)
- Protect unit heads from contaminants. (Sections 6.1.3, 8.2.1)
- Flow Rates: Eye/face wash unit delivers a minimum of 3.0 GPM (11 L/Min) for 15 minutes. (Section 6.1.6, 8.2.1)
- Use a flow meter to test flow rate; use a test gauge to test flow pattern. (Sections 6.1.7, 6.3, 8.2.1)

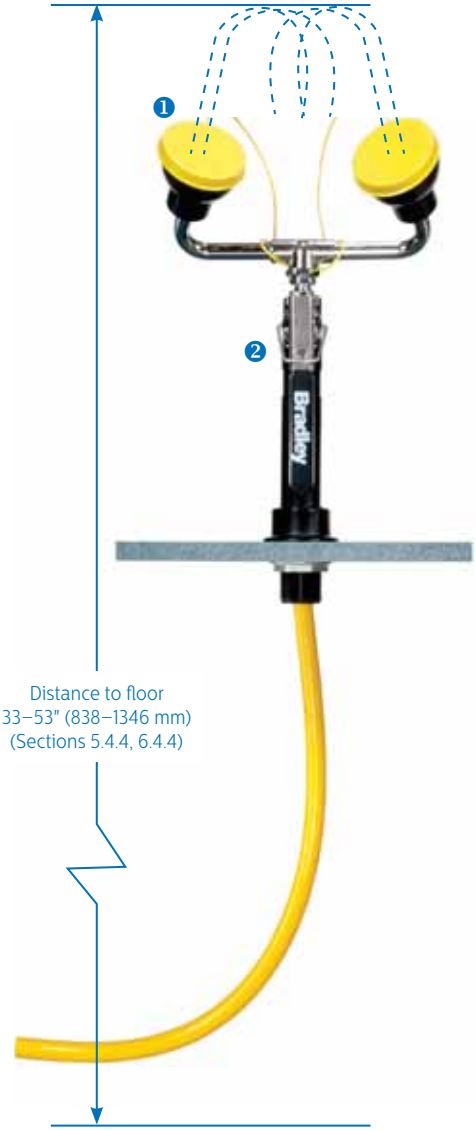

Top down view

Required to be free of obstructions a minimum of 6" (152 mm) from the outside of the eye or eye/face wash sprayheads. (Sections 6.4.4, 8.2.1) ❸

Use a Bradley test gauge (Model 269-1444) to check flow pattern. ❹

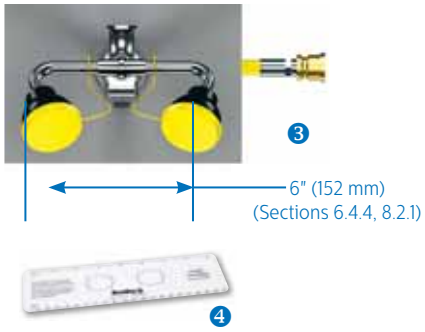

15-minute Flush	Tepid Water	Third-Party Certifications	Weekly Activations:	Annual Inspections
Compliant fixtures release a continuous flow of tepid flushing fluid for a minimum of 15 minutes. (Sections 6.1.6, 6.4.5, 6.4.6, 8.2.1)	(lukewarm) 60–100°F (15.6–37.8°C) encourages full 15 minute flush or until medical personnel arrive. (Definitions, Sections 6.4.6, 8.2.1, Appendix B6)	Manufacturers may have their safety fixtures independently evaluated by a third-party testing organization. Look for certification when selecting a compliant fixture. (Definitions)	Flush lines and test by activating weekly. Inspection tags are often included with fixtures to document testing and to satisfy a safety audit. (Sections 6.5.2, 8.2.1, 8.2.4.2)	ANSI recommends a comprehensive annual inspection of the facility to evaluate modified work space, assess new hazards introduced into the area, and to identify fixtures needing replacement or repair. (Sections 6.5.5, 8.2.4.5)

FREE Confidential Safety Evaluation • 800.BRADLEY • bradleysafety.com

Deck-Mounted Drench Hoses

S19-460

Single vertical sprayhead

UL classified to meet ANSI/ISEA Z358.1 as a supplemental Eyewash only

S19-460

S19-465

Single angled sprayhead

UL classified to meet ANSI/ISEA Z358.1 as a supplemental Eyewash only

S19-465

S19-460EFW

Dual vertical sprayheads

UL classified to meet ANSI/ISEA Z358.1

S19-460EFW

S19-465EFW

Dual angled sprayheads

UL classified to meet ANSI/ISEA Z358.1

S19-465EFW

Wall-Mounted Drench Hoses

S19-430A

Single vertical sprayhead

8' (2.4 m) yellow thermoplastic hose

UL classified to meet ANSI/ISEA Z358.1 as a supplemental Eyewash only

S19-430A

S19-430D

Single vertical sprayhead

6' (1.8 m) flexible stainless steel hose

UL classified to meet ANSI/ISEA Z358.1 as a supplemental Eyewash only

S19-430D

Retrofit Drench Hoses

S19-430EH

Single head drench hose

Retrofits to most eye or eye/face wash fixtures

UL classified to meet ANSI/ISEA Z358.1 as a supplemental Eyewash only

S19-430EH

S19-430SH

Single head drench hose

Retrofits to most drench showers or combination units

UL classified to meet ANSI/ISEA Z358.1 as a supplemental Eyewash only

S19-430SH

Wall-Mounted Drench Hoses with Recoil Hose

S1944011ABC

Dual vertical sprayheads

ANSI-compliant eye/face wash

12' (3.7 m) recoiling hose

Squeeze handle activated

UL classified to meet ANSI/ISEA Z358.1

S1944011ABC

S1944011BBC

Dual angled sprayheads

ANSI-compliant eye/face wash

12' (3.7 m) recoiling hose

Squeeze handle activated

UL classified to meet ANSI/ISEA Z358.1

S1944011CBC

Single vertical sprayhead

12' (3.7 m) recoiling hose

Squeeze handle activated

UL classified to meet ANSI/ISEA Z358.1 as a supplemental Eyewash only

S1944011CBC

S1944011CBD

Single vertical sprayhead

25' (7.6 m) recoiling hose

Squeeze handle activated

UL classified to meet ANSI/ISEA Z358.1 as a supplemental Eyewash only

S1944022ABC

Dual vertical sprayheads

ANSI-compliant eye/face wash

12' (3.7 m) recoiling hose

Paddle activation handle

UL classified to meet ANSI/ISEA Z358.1

S1944022ABC

Back-flow Preventers

To select the appropriate back-flow preventer, check with local governing authorities on local codes and ordinances.

S27-303

Dual check valve, Series 7

S45-2310

Dual check vacuum breaker with intermediate atmospheric vent, Series 9D

S45-2309

Dual check vacuum breaker with atmospheric vent, Series 9

140-226

Hose guide bracket

Mounts under the deck to guide the hose

Deck- and Wall-Mounted Eye and Eye/Face Washes

Overview

A variety of laboratory fixtures are available to accommodate traditional and non-traditional installations. Elementary schools, hospitals, universities and research facilities equip their premises with these versatile, yet unique fixtures. Laboratory fixtures may be faucet, deck, wall, or counter-mounted. Bradley offers a diverse variety of fixtures to provide Eyewash solutions where space is restricted and safety is of the utmost importance.

Key Features

- Chrome-plated brass pipe
- Paddle or push down handle activation
- ½" (13 mm) Inlet
- All items comply with ANSI/ISEA Z358.1

Emergency Fixture Facts

The emergency fixture must be on the same level as the hazard. ANSI/ISEA Z358.1 Section 5.4.2

For additional safety products typically installed in laboratory applications, please consider:

Horizontal/Vertical Drench Showers	page 11
Pedestal-Mounted Eyewashes and Eye/Face Washes.	page 15
Wall-Mounted Eyewashes and Eye/Face Washes.	page 23

Recommended Emergency TMV

Navigator EFX 8 (S19-2000)

The current ANSI standard calls for emergency Eyewashes and drench showers to deliver tepid water (60–100°F/15.5–37.7°C) for 15 minutes. A thermostatic mixing valve is needed to mix the hot and cold water supply. Bradley's Navigator TMVs are the most reliable emergency TMVs on the market. One valve is required per plumbed unit.

Faucet-Mounted Eyewash

S19-200B

- One-step activation
- Several adapters included
- UL classified to meet ANSI/ISEA Z358.1
- Lead-Free

S19-200B
faucet not included

Deck/Counter-Mounted Eyewash

S19-260

- Flush-mounted, stainless steel bowl with eye/face wash
- Push-down activation handle
- 12⅞" (327 mm)stainless steel bowl
- 1¼" (32 mm) waste
- UL classified to meet ANSI/ISEA Z358.1

S19-260

S19-270B

- Stainless steel push handle
- Eyewash swings 360 degrees
- Right-hand activation
- UL classified to meet ANSI/ISEA Z358.1

S19-270B

S19-270BL

- Stainless steel push handle
- Eyewash swings 360 degrees
- Left-hand activation
- UL classified to meet ANSI/ISEA Z358.1

Wall-Mounted

S19-240

- Eyewash
- Yellow PVC push handle
- UL classified to meet ANSI/ISEA Z358.1

S19-240

S19-240FW

- Eye/face wash
- Yellow PVC push handle
- UL classified to meet ANSI/ISEA Z358.1

Swing-Activated Eye and Eye/Face Washes

Overview

Eyewash or eye/face wash fixtures that are swing activated are often located on lavatory decks that need to be available for a variety of different uses. A swing-activated fixture provides access to an ANSI-compliant fixture, while simultaneously making full use of valuable, yet limited space. Choose from a variety of wall-mounted or deck-mounted designs that swing out of the way when the fixture is in its resting position, but is still accessible for use during an emergency.

Key Features

- Chrome-plated brass pipe
- Swing-down or swing-over activation controlled between two precise ceramic discs
- 20° activation and deactivation reduces splashing
- All items comply with ANSI/ISEA Z358.1
- Halo Eyewashes and eye/face washes provide the most wash down coverage available
- Halo dust cover caps on the Eyewash are hinged for a more secure hold — keeping dust and debris off the water spouts

Emergency Fixture Facts

ANSI identifies a door as a barrier. ANSI/ISEA Z358.1, Appendix B5.

Recommended Emergency TMV

Navigator EFX 8 (S19-2000)

The current ANSI standard calls for emergency Eyewashes and drench showers to deliver tepid water (60–100°F/15.5–37.7°C) for 15 minutes. A thermostatic mixing valve is needed to mix the hot and cold water supply. Bradley's Navigator TMVs are the most reliable emergency TMVs on the market. One valve is required per plumbed unit.

For additional safety products typically installed in laboratory applications, please consider:

Horizontal/Vertical Drench Showers	page 11
Pedestal-Mounted Eyewashes and Eye/Face Washes.	page 15
Wall-Mounted Eyewashes and Eye/Face Washes.	page 23
Standard and Explosion proof Signaling Systems	page 56-58

Quick Compliance Guide

This guide serves as a supplement to the ANSI/ISEA Z358.1-2014 standard.

Laboratory Eye & Eye/Face Wash Fixtures

- Valve mechanism opens in one second or less; it stays open until manually closed. (Sections 5.2, 6.2) ❶
- Supply with flushing fluid, ("potable water, preserved water, preserved buffered saline solution or other medically acceptable solution...") (Definitions, Sections 5.1.1, 6.1.1)
- Locate 10 seconds or 55' (16.8 m) from contaminants or hazardous materials.
- Locate on same plane as the hazard, free of obstructions. (Sections 5.4.2, 6.4.2, Appendix B5)
- Protect unit heads from contaminants. (Sections 5.1.3, 6.1.3) ❷
- Flow Rates: Eyewash unit delivers a minimum of .4 GPM for 15 minutes. (Section 5.1.6) Eye/face wash unit delivers a minimum of 3.0 GPM (11 L/Min) for 15 minutes. (Section 6.1.6)
- Use a flow meter to test flow rate; use a test gauge to test flow pattern. (Sections 5.1.8, 5.3.1, 6.1.7, 6.3)

The Joint Commission 2009 EC Standard for Hospitals requires: "The hospital takes action to minimize or eliminate identified safety and security risks in the physical environment." Furthermore, hospitals are required to "Minimize risk associated with selecting, handling, storing, transporting, using, and disposing hazardous chemicals." Surveyors commonly refer to OSHA requirements and the ANSI Standard for further guidance on best demonstrated practices.

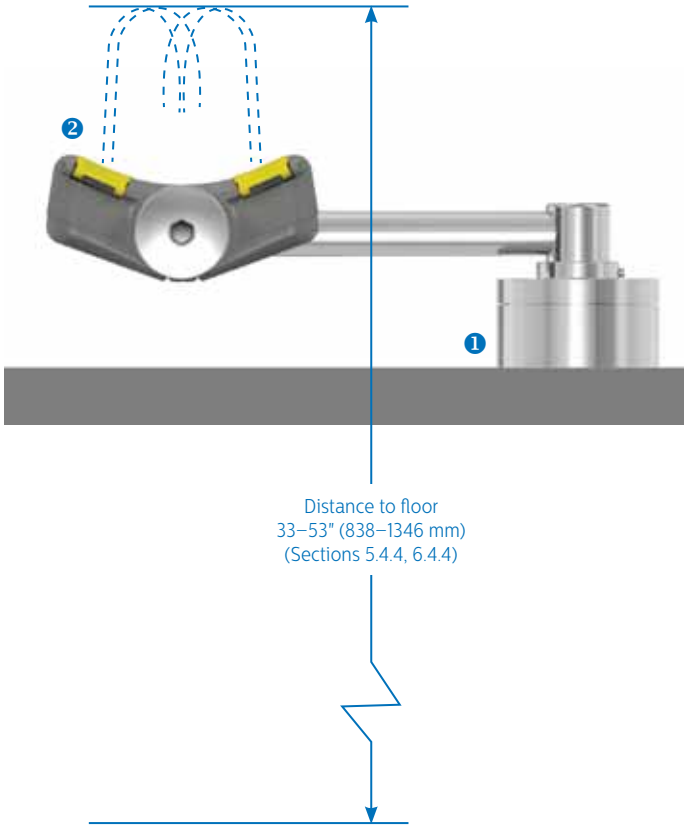

Top down view

Required to be free of obstructions a minimum of 6" (152 mm) from the outside of the eye or eye/face wash sprayheads. (Sections 5.4.4,6.4.4) ❸

Use a Bradley test gauge (Model 269-1444) to check flow pattern. ❹

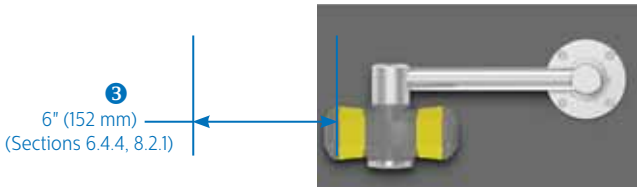

15-minute Flush	Tepid Water	Third-Party Certifications	Weekly Activations:	Annual Inspections
Compliant fixtures release a continuous flow of tepid flushing fluid for a minimum of 15 minutes. (Sections 5.1.6, 5.4.5, 5.4.6, 6.1.6, 6.4.5, 6.4.6)	(lukewarm) 60–100°F (15.6–37.8°C) encourages full 15 minute flush or until medical personnel arrive. (Definitions, Sections 5.4.6, 6.4.6, Appendix B6)	Manufacturers may have their safety fixtures independently evaluated by a third-party testing organization. Look for certification when selecting a compliant fixture. (Definitions)	Flush lines and test by activating weekly. Inspection tags are often included with fixtures to document testing and to satisfy a safety audit. (Sections 5.5.2, 6.5.2)	ANSI recommends a comprehensive annual inspection of the facility to evaluate modified work space, assess new hazards introduced into the area, and to identify fixtures needing replacement or repair. (Sections 5.5.5, 6.5.5)

FREE Confidential Safety Evaluation • 800.BRADLEY • bradleysafety.com

Eyewashes

S19274C

- Deck/counter-mounted Eyewash
- Durable, ceramic valve
- Swings over sink for easy use
- Universal right or left hand mounting options
- UL classified to meet ANSI/ISEA Z358.1

S19274C

S19274HD

- Deck/counter-mounted Eyewash
- Durable, ceramic valve
- Swings down over sink for easy use
- UL classified to meet ANSI/ISEA Z358.1

S19274HD

S19274HDR

- Reduced pipe length
- Deck/counter-mounted Eyewash
- Durable, ceramic valve
- Swings down over sink for easy use
- UL classified to meet ANSI/ISEA Z358.1

S19274HW

- Wall-mounted Eyewash
- Durable, ceramic valve
- Swings down over sink for easy use
- UL classified to meet ANSI/ISEA Z358.1

S19274HW

S19274HDB

- Deck/counter-mounted Eyewash
- Durable, ceramic valve
- Swings down over sink for easy use
- UL classified to meet ANSI/ISEA Z358.1

S19274HWB

S19274HWB

- Wall-mounted Eyewash
- Durable, ceramic valve
- Swings down over sink for easy use
- UL classified to meet ANSI/ISEA Z358.1

S19-270C

- Deck/counter-mounted Eyewash
- Durable, ceramic valve
- Swings over sink for easy use
- Universal right or left hand mounting options
- UL classified to meet ANSI/ISEA Z358.1

S19-270C

S19-270HD

- Deck/counter-mounted Eyewash
- Durable, ceramic valve
- Swings down over sink for easy use
- UL classified to meet ANSI/ISEA Z358.1

S19-270HD

S19-270HW

- Wall-mounted Eyewash
- Durable, ceramic valve
- Swings down over sink for easy use
- UL classified to meet ANSI/ISEA Z358.1

S19-270HW

S19-280D

- Deck/counter-mounted Eyewash
- Durable, ceramic valve
- Swings down over sink for easy use
- UL classified to meet ANSI/ISEA Z358.1

S19-280D

S19-280W

- Wall-mounted Eyewash
- Durable, ceramic valve
- Swings down over sink for easy use
- UL classified to meet ANSI/ISEA Z358.1

Eye/Face Washes

S19274E

- Deck/counter-mounted eye/face wash
- Durable, ceramic valve
- Swings over sink for easy use
- Universal right or left hand mounting options
- UL classified to meet ANSI/ISEA Z358.1

S19274E

S19-270E

- Deck/counter-mounted eye/face wash
- Durable, ceramic valve
- Swings over sink for easy use
- Universal right or left hand mounting options
- UL classified to meet ANSI/ISEA Z358.1

S19-270E

S19274JD

- Deck/counter-mounted eye/face wash
- Durable, ceramic valve
- Swings down over sink for easy use
- UL classified to meet ANSI/ISEA Z358.1

S19274JD

S19-270JD

- Deck/counter-mounted eye/face wash
- Durable, ceramic valve
- Swings down over sink for easy use
- UL classified to meet ANSI/ISEA Z358.1

S19-270JD

S19274JDB

- Deck/counter-mounted eye/face wash
- Durable, ceramic valve
- Swings down over sink for easy use
- UL classified to meet ANSI/ISEA Z358.1

S19274JDB

S19-270JW

- Wall-mounted eye/face wash
- Durable, ceramic valve
- Swings down over sink for easy use
- UL classified to meet ANSI/ISEA Z358.1

S19-270JW

S19274JW

- Wall-mounted eye/face wash
- Durable, ceramic valve
- Swings down over sink for easy use
- UL classified to meet ANSI/ISEA Z358.1

S19274JW

S19-290D

- Deck/counter-mounted eye/face wash
- Durable, ceramic valve
- Swings down over sink for easy use
- UL classified to meet ANSI/ISEA Z358.1

S19274JWB

- Wall-mounted eye/face wash
- Durable, ceramic valve
- Swings down over sink for easy use
- UL classified to meet ANSI/ISEA Z358.1

S19-290W

- Wall-mounted eye/face wash
- Durable, ceramic valve
- Swings down over sink for easy use
- UL classified to meet ANSI/ISEA Z358.1

S19-290W

Recessed Drench Showers, Eye and Eye/Face Washes

Overview

The recessed, corrosion-resistant, brushed stainless steel units offer a sleek, modern look. Frequently installed in hospitals, high schools, universities and laboratories, these fixtures maximize the space available. Many of the fixtures in this category include an integral drain pan, which collects the water run-off from the Eyewash and directs it into the drain, encouraging weekly activation. Halo eye or eye/face wash targets those areas of the body where a gentle spray of water is optimal.

Key Features

- SpinTec showerhead improves water distribution
- Fixtures exceed ANSI-mandated flow rates
- Flush-mounted, corrosion-resistant, type 304 stainless steel cabinet
- Various modes of activation are available (fully recessed, surfacemounted or pull down handles)
- Swing down activation controlled between two precise ceramic discs
- All items comply with ANSI/ISEA Z358.1
- Halo Eyewashes and eye/ face washes provide the most washdown coverage available
- Halo dust cover caps on the Eyewash are hinged for a more secure hold, keeping dust and debris off the water spouts

Emergency Fixture Facts

Emergency fixtures must be activated on a weekly basis and inspected annually.
ANSI/ISEA Z358.1 Section 4.6.2, 5.5.2, 6.5.2, 7.5.5

Suggested Accessories

Standard and Explosion-Proof Signaling Systems	page 56-58
Drench Shower Testers	page 84

Other parts and accessories are listed beginning on page 84

Recommended Emergency TMV

Navigator EFX 25 (S19-2100)

The current ANSI standard calls for emergency Eyewashes and drench showers to deliver tepid water (60–100˚F/15.5–37.7˚C) for 15 minutes. A thermostatic mixing valve is needed to mix the hot and cold water supply. Bradley's Navigator TMVs are the most reliable emergency TMVs on the market. One valve is required per plumbed unit.

Barrier-Free, Recessed Drench Showers

S19-125BF

Fully recessed, push-down, coated stainless steel handle for quick and easy activation

Extended stainless steel shroud

UL classified to meet ANSI/ISEA Z358.1

S19-125BF

S19-125SBF

Same features as S19-125BF, except with stainless steel plate to conceal ball valve

Surface-mounted, coated stainless steel handle for quick and easy activation

Extended stainless steel shroud

UL classified to meet ANSI/ISEA Z358.1

S19-125SBF

S19-125FMBF

Same features as S19-125BF, except with flush-mounted showerhead

UL classified to meet ANSI/ISEA Z358.1

S19-125FMBF

S19-125SFMBF

Same features as S19-125SBF, except with flush-mounted, showerhead

UL classified to meet ANSI/ISEA Z358.1

S19-125SFMBF

Cabinet-Mounted Swing-Down Eyewash

S19284H

Activated when arm is pulled down

Wide access panel in front of unit for easy accessibility and serviceability

UL classified to meet ANSI/ISEA Z358.1

S19284H

S19284J

Activated when arm is pulled down

Wide access panel in front of unit for easy accessibility and serviceability

UL classified to meet ANSI/ISEA Z358.1

S19284J

S19284HB

Same features as S19284H, except barrier-free

UL classified to meet ANSI/ISEA Z358.1

S19284HB

S19284JB

Same features as S19284J, except barrier-free

UL classified to meet ANSI/ISEA Z358.1

S19284JB

Recommended Emergency TMV

Navigator EFX 8 (S19-2000)

The current ANSI standard calls for emergency Eyewashes and drench showers to deliver tepid water (60–100˚F/15.5–37.7˚C) for 15 minutes. A thermostatic mixing valve is needed to mix the hot and cold water supply. Bradley's Navigator TMVs are the most reliable emergency TMVs on the market. One valve is required per plumbed unit.

Barrier-Free, Cabinet Concealed Swing-Down Eyewash

S19294HB

- Concealed, cabinet-mounted Eyewash
- Gas spring allows the door to descend in a smooth and controlled manner
- Activated by opening the stainless steel door
- Wide access panel in front of unit for easy accessibility and serviceability
- Designed to mount in a 4" (102 mm) deep wall
- UL classified to meet ANSI/ISEA Z358.1

S19294HB

S19294HBT

- Same features as S19294HB, except with P-trap
- UL classified to meet ANSI/ISEA Z358.1

Barrier-Free, Cabinet Concealed Swing-Down Eye/Face Wash

S19294JB

- Concealed, cabinet-mounted eye/face wash
- Gas spring allows the door to descend in a smooth and controlled manner
- Activated by opening the stainless steel door
- Wide access panel in front of unit for easy accessibility and serviceability
- Bottom-fed emergency TMV may be installed in maintenance compartment below fixture (recommended S19-2000EFX)
- Designed to mount in a 6" (152 mm) deep wall
- UL classified to meet ANSI/ISEA Z358.1

S19294JB

S19294JBT

- Same features as S19294JB, except with P-trap
- UL classified to meet ANSI/ISEA Z358.1

Recommended Emergency TMV

Navigator EFX 8 (S19-2000)

The current ANSI standard calls for emergency Eyewashes and drench showers to deliver tepid water (60–100°F/15.5–37.7°C) for 15 minutes. A thermostatic mixing valve is needed to mix the hot and cold water supply. Bradley's Navigator TMVs are the most reliable emergency TMVs on the market. One valve is required per plumbed unit.

S19-2000EFX for use only with S19294JB and S19294JBT.

Barrier-Free, Recessed Drench Shower and Eyewash

S19345HXB

- Extended, stainless steel shroud
- Fully recessed, push-down, coated stainless steel handle
- Wide access panel in front of unit for easy accessibility and serviceability
- Gas spring allows the door to descend in a smooth and controlled manner
- Designed to mount between a 4" (102 mm) wall
- UL classified to meet ANSI/ISEA Z358.1

S19345HXB

S19345HXBT

- Same features as S19345HXB, except with P-trap
- UL classified to meet ANSI/ISEA Z358.1

S19345HFB

- Same features as S19345HXB, except with flush-mounted showerhead
- UL classified to meet ANSI/ISEA Z358.1

S19345HFBT

- Same features as S19345HFB, except with P-trap
- UL classified to meet ANSI/ISEA Z358.1

S19345HFB

Barrier-Free, Recessed Drench Shower and Eye/Face Wash

S19345JXB

- Extended, stainless steel shroud
- Fully recessed, push-down, coated stainless steel handle
- Wide access panel in front of unit for easy accessibility and serviceability
- Gas spring allows the door to descend in a smooth and controlled manner
- Designed to mount between a 4" (102 mm) wall
- UL classified to meet ANSI/ISEA Z358.1

S19345JXB

S19345JXBT

- Same features as S19345JXB, except with P-trap
- UL classified to meet ANSI/ISEA Z358.1

S19345JFB

- Same features as S19345JXB, except with flush-mounted showerhead
- UL classified to meet ANSI/ISEA Z358.1

S19345JFBT

- Same features as S19345JFB, except with p-trap
- UL classified to meet ANSI/ISEA Z358.1

S19-345JFBT

Recommended Emergency TMV

Navigator EFX 60 (S19-2200)

The current ANSI standard calls for emergency Eyewashes and drench showers to deliver tepid water (60–100°F/15.5–37.7°C) for 15 minutes. A thermostatic mixing valve is needed to mix the hot and cold water supply. Bradley's Navigator TMVs are the most reliable emergency TMVs on the market. One valve is required per plumbed unit.

Drench Showerheads

Recessed flush-mounted showerhead provides smallest footprint in ceiling. For the most durable showerhead, select stainless steel which stands up to corrosion and aggressive impact.

Eyewashes

When the safety risk targets the eye area, Bradley's Eyewashes are the recommended solution for emergency care. The Halo Eyewash sprayhead flows at approximately 5.1 GPM (19 L/Min), exceeding ANSI's 0.4 GPM (1.5 L/Min) flow rate. The flow gently flushes water directly on the eye to wash out contaminants.

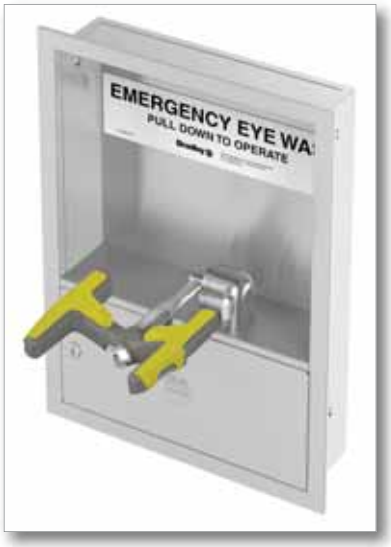

Eye/Face Washes

When chemicals and other hazardous liquids can contaminate the face and eyes, an eye/face wash is the solution. Bradley's Halo eye/face wash sprayhead features integral flow controls that provide a soft flush of approximately 5.1 GPM (19 L/Min). Eye/face washes are considered premium fixtures that exceed ANSI's 3.0 GPM (11 L/Min) mandate.

Flow Controls

In the interest of water conservation, each shower head features an integral 20 GPM (76 L/Min) flow control. This item must be purchased separately for most competing brands.

On-Site® Portable Gravity-fed Eyewashes

Overview

The On-Site (S19-921) portable Eyewash is the most innovative gravity-fed Eyewash currently on the market. Employing a patented design, the On-Site is the only Eyewash on the market that uses just 7 gallons of water that provides a full 15-minute flush, at the ANSI-mandated flow rate and maintains a consistent height throughout the spray pattern until the last drop of liquid is depleted from the tank. The clear yellow polycarbonate tank offers an exclusive vandal-resistant design that makes worker safety a priority.

Key Features

- Transparent tank allows solution level to be checked easily
- High-visibility yellow, molded pedestal and tank
- Vandal-resistant, patented design
- 7 gal/27 L (60 lbs/27 kg) provides full 15-minute flush
- Heater jacket available to prevent freezing
- Complies with ANSI/ISEA Z358.1
- One-year warranty

Emergency Fixture Facts

ANSI requires the visual inspection of self-contained Eyewashes to be certain the tank is full and ready for use. ANSI/ISEA Z358.1 Section 5.5.3

Ideal for locations where a plumbed water source is not available.

Quick Compliance Guide

This guide serves as a supplement to the ANSI/ISEA Z358.1-2014 standard.

Self-Contained Eyewash Fixtures

- Eyewash unit delivers a minimum of .4 GPM for 15 minutes. (Section 5.3.2)
- Valve mechanism opens in one second or less; it stays open until manually closed. (Section 5.3.2)
- Supply with flushing fluid, ("potable water, preserved water, preserved buffered saline solution or other medically acceptable solution…") (Definitions, Section 5.1.1)
- Locate 10 seconds or 55' (16.8 m) from contaminants or hazardous materials. Locate on same plane as the hazard, free of obstructions. (Sections 5.4.2, Appendix B5)
- Use a test gauge to test flow pattern. (Section 5.4.7)
- Frigid conditions require the installation of freeze protection equipment. (Section 5.4.5) ❶

Front View

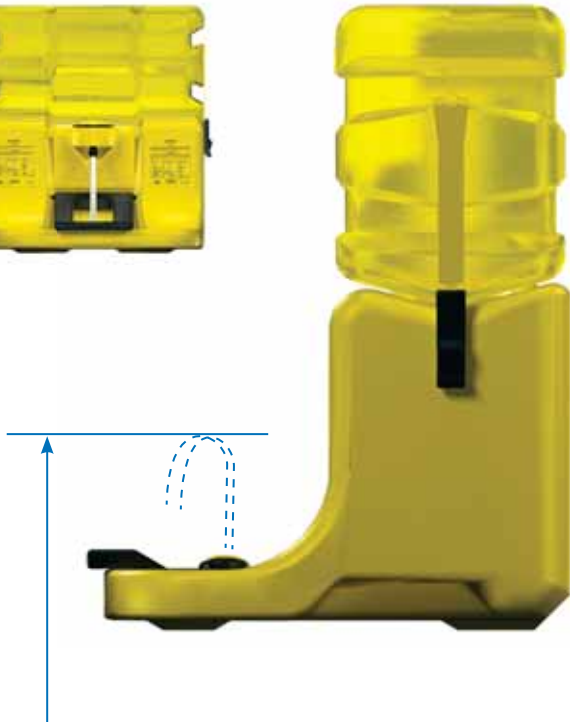

Distance to floor
33–53" (838–1346 mm)
(Sections 5.4.4, 6.4.4)

Top down view

Required to be free of obstructions a minimum of 6" (152 mm) from the outside of the Eyewash sprayheads. (Sections 5.4.4) ❷

Use a Bradley test gauge (Model 269-1444) to check flow pattern. ❸

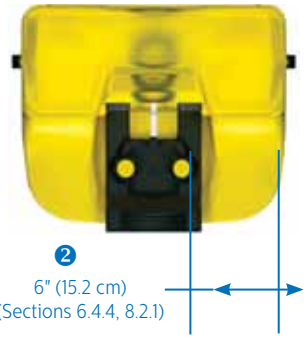

15-minute Flush	Tepid Water	Third-Party Certifications	Weekly Activations:	Annual Inspections
Compliant fixtures release a continuous flow of tepid flushing fluid for a minimum of 15 minutes. (Sections 5.1.6, 5.4.5, 5.4.6)	(lukewarm) 60–100°F (15.6–37.8°C) encourages full 15 minute flush or until medical personnel arrive. (Definitions, Sections 5.4.6, Appendix B6)	Manufacturers may have their safety fixtures independently evaluated by a third-party testing organization. Look for certification when selecting a compliant fixture. (Definitions)	Flush lines and test by activating weekly. Inspection tags are often included with fixtures to document testing and to satisfy a safety audit. (Sections 5.5.2)	ANSI recommends a comprehensive annual inspection of the facility to evaluate modified work space, assess new hazards introduced into the area, and to identify fixtures needing replacement or repair. (Sections 5.5.5)

FREE Confidential Safety Evaluation • 800.BRADLEY • bradleysafety.com

On-Site® Portable Gravity-fed Eyewash

S19-921
Hinged Eyewash tray activates in one quick motion
Stainless steel clamps secure the tank during transport
Vandal-resistant unit; foreign objects cannot be introduced into tank because all openings are sealed once the tank is installed
7 gal (27 L) tank is one of the lightest portable Eyewashes on the market
Wall bracket (can also deck mount)
UL classified to meet ANSI/ISEA Z358.1

S19-921

On-Site Heater Jacket Retrofit Kit

S19-921HR
Heater jacket ships attached to tank
No tools required

On-Site Waste Cart

S19-399
High-visibility yellow
Captures used fluid, 56 gal (212 L) capacity
Tapered sump, easy to drain

S19-399

On-Site Eyewash and Heater Jacket

S19-921H
Protects against freezing; down to -10°F (-23.3°C)
Insulated heater jacket conceals a 121-watt heater
Secondary thermostat prevents overheating if primary thermostat fails
Requires 120-volt AC line
UL classified to meet ANSI/ISEA Z358.1

S19-921H

On-Site Water Eyewash Kit

S19-949
Replacement cap
Nine liners
Inspection tag

S19-949

On-Site Foam Liner

269-1379
Perforated foam liner
Sold individually

On-Site Transparent Tank

133-140
Replacement 7 gal (27 L) tank
Sold individually

133-140

Portable Pressurized Eyewashes

Overview

Looking for a portable Eyewash that will withstand corrosive materials in isolated locations, can be used on trucks or areas without plumbing that require a 15-minute flush? Bradley's stainless steel portable pressurized tanks resist corrosion, and offer several options for customers that are looking for an Eyewash with a drench hose, or even a tank outfitted with a heater jacket to prevent freezing. Portable pressurized tanks are a versatile, corrosion-resistant solution, to provide an ANSI-compliant fixture in remote or non-plumbed locations.

Portable pressurized fixtures balance the volume of water with a predetermined amount of pressure to maximize the time and volume of solution that provides a flush. The portable pressurized Eyewash offers the convenience of a portable unit, is sold in a range of sizes, and the heater jacket option offers flexibility to handle a wide range of applications..

Key Features

- Built-in carrying handles
- Tire filler valve with 0 – 160 psi (1103 kPa) air gauge
- Pressure relief valve to prevent over pressurization
- 8' (2.4 m) drench hose (unless otherwise specified)
- Chrome-plated brass Eyewash
- All items comply with ANSI/ISEA Z358.1

Emergency Fixture Facts

ANSI guidelines require that emergency fixtures supply potable water, preserved water, preserved buffered saline solution, or an alternative medically accepted solution.

ANSI/ISEA Z358.1 Section 3, Definitions

5 gal (19 L) Units

- Eyewash flow: 8 minutes
- Drench hose flow: 2.5 minutes
- Meets ANSI criteria as a personal wash station only

S19-670

Drench hose, no Eyewash

S19-671

Eyewash only, no drench hose

S19-671H

Jacket prevents freezing

280-watt heater

Eyewash only

S19-671

S19-672

Eyewash with drench hose

S19-672

10 gal (39 L) Units

- Eyewash flow: 15 minutes
- Drench hose flow: 3.5 minutes
- UL classified to meet ANSI/ISEA Z358.1

S19-690

Eyewash with drench hose

S19-690LHS

Eyewash only, no drench hose

S19-690LHS

S19-690H

Jacket prevents freezing

510-watt heater

Eyewash only

S19-690H

15 gal (57 L) Units

- Eyewash flow: 18 minutes
- Drench hose flow: 5 minutes
- UL classified to meet ANSI/ISEA Z358.1

S19-788

Eyewash and drench hose

S19-788LHS

Eyewash only, no drench hose

S19-788H

Jacket prevents freezing

510-watt heater

Eyewash only

S19-788

Heater Jacket Retrofit Kits for Portable Pressurized Eyewashes

S19-671HR

Jacket for 5 gal (19L) tank

S19-690HR

Jacket for 10 gal (39 L) tank

S19-788HR

Jacket for 15 gal (57 L) tank

Optional Cart

S19-690A

Four-wheel, stainless steel transport cart

For use with fixtures without a heater jacket

S19-690A

On-Site Heater Jacket Retrofit Kit

S19-921HR

Heater jacket ships attached to tank

No tools required

On-Site Waste Cart

S19-399

High-visibility yellow

Captures used fluid, 56-gallon capacity

Tapered sump, easy to drain

S19-399

Drench Hose Spray Kits

Includes all necessary fittings and hanger for attaching hose to Bradley units to provide a body water drench

S19-430EH

Drench hose spray kit that attaches to eyewashes

S19-430EH

S19-430SH

Drench hose spray kit for use with drench showers

S19-430SH

Privacy Curtain

S19-330

Universal mounting

Waterproof, 3-ply reinforced vinyl laminate

Chemical and mildew resistant

Curtain Color: high-visibility yellow
Dimensions: 70"x 145" (1778 x 3683 mm)

Curtain rail and mounting brackets Stainless steel corrosion resistant Rail dimensions: 1½" x 42" diameter

For a model compatible with barrier-free fixtures, contact Bradley for more information

Not compatible with PVC or heat trace units

S19-330

Drench Shower Tester

S19-330ST

Heavy-duty tester for required weekly activation

Water-tight funnel with weighted bottom

Dimensions: 84" (2134 mm)long

8' (2.4 m) telescoping aluminum handle

S19-330ST

S19-322 Series

S19-322E

- UL listed ½" (32mm) flow switch
- NEMA 1 signaling system
- Universal AC Input: 90-264 AC
- Flashing amber LED signal light
- For eye or eye/face washes

S19-322E

S19-322D

- UL listed 1¼" (32mm) flow switch
- NEMA 1 signaling system
- Universal AC Input: 90-264 AC
- Flashing amber LED signal light
- For drench showers or combination units

S19-322D

S19-323 Series

S19-323E

- UL listed ½" (13 mm) brass flow switch
- NEMA 3R signaling system
- 6' (1.8 m) Cable
- For eye or eye/face wash
- Universal AC Input: 90-264 AC
- Amber signal light

S19-323E

S19-323D

- UL listed 1¼" (32mm) brass flow switch
- NEMA 3R signaling system
- 6' (1.8 m) Cable
- For drench shower or combination units
- Universal AC Input: 90-264 AC
- Amber signal light

S19-323D

S19-324 Series

S19-324E

- Brass UL listed ½" (13mm) flow switch
- NEMA 4X signaling system
- 6' (1.8 m) Cable
- For eye or eye/face wash
- Silence switch with auto reset
- Universal AC Input: 90-264 AC
- Amber signal light

S19-324E

S19-324D

- Brass, UL listed 1¼" (32 mm) flow switch
- NEMA 4X signaling system
- 6' (1.8 m) Cable
- For drench showers or combination units
- Silence switch with auto reset
- Universal AC Input: 90-264 AC
- Amber signal light

S19-324D

S19-324DG, S19-324DGW

- Brass UL listed 1¼" (32 mm) flow switch
- NEMA 4X signaling system
- 6' (1.8 m) Cable
- Silence switch with auto reset
- Green beacon light
- White area light (S19-324DGW only)
- For drench showers or combination units
- Universal AC Input: 90-264 AC
- Amber signal light

S19-324DGW

S19-324 Series continued

S19-324EG, S19-324EGW

- UL listed ½" (13mm) brass flow switch
- NEMA 4X signaling system
- 6' (1.8 m) Cable
- Silence switch with auto reset
- Green beacon light
- White area light (S19-324EGW only)
- For eye wash or eye/face washes
- Universal AC Input: 90-264 AC
- Amber signal light

S19-324EG

S19-324EGW

Explosion-Proof Emergency Signaling System (Class 1 Division 2, Groups B, C & D)

S19-324D2D/HT

- NEMA 4X
- Brass UL listed 1¼" (32 mm) flow switch
- For drench shower or combination units
- Amber signal light
- S19-324D2DHT for S19-304 heat traced combination units

S19-324D2D

Explosion-Proof Emergency Signaling System (Class 1 Division 1, Groups C & D)

S19-324D1D/HT

- NEMA 4X
- Brass UL listed 1¼" (32 mm) flow switch
- For drench shower or combination units
- Amber signal light
- S19-324D1DHT for S19-304 heat traced combination units

S19-324D1D

Freeze and Scald Protection Valves

Bradley's freeze and scald protection valves coupled with Navigator tempering systems serve an important role. Although the tempering system supplies the fixture with tepid water, environmental conditions may cause the water to freeze or become scalding hot. To ensure the fixture is ready to use and the water is safe for your employees at all times, consider the addition of a freeze or scald protection valve, to bleed off water in extreme temperatures.

Freeze Protection Valve Kits

S45-1986

For use with Eyewashes

S45-1987

For use with drench showers

* Classic combination fixtures require one each of S45-1986 and S45-1987. Halo combination fixtures only require one S45-1986.

Scald Protection Valve Kits

S45-1989

For use with Eyewashes

S45-1990

For use with drench showers

* Classic combination fixtures require one each of S45-1989 and S45-1990. Halo combination fixtures only require one S45-1989.

Don't see the signaling system you are looking for? Go to page 60-62 to use the S19-324 Configurator

Eyewash Handle, Ball Valve and Hardware

S30-070

Stainless steel handle

Hardware

½" (13 mm) NPT stay-open ball valve

S30-070

S30-072

Stainless steel handle

Hardware

½" (13 mm) NPT stay-open ball valve

For stainless steel hinged dust covers only

S30-074

Left-hand activation conversion kit for pedestal-mounted or combination fixtures

Stainless steel handle

Hardware

½" (13 mm) stay-open ball valve

S45-122

Plastic handle

Hardware

½" (13 mm) NPT stay-open ball valve

S45-122

Eyewash Handle, Ball Valve and Hardware Only

128-135

Plastic handle only

S08-336

Stainless steel handle only

Vertical valve applications only

S08-338

Stainless steel handle only

Horizontal valve applications only

S30-075

Left-hand activation conversion kit for pedestal-mounted or combination fixtures

Stainless steel handle

Hardware

For S19-270BL Eyewash only

S30-087

Stainless steel handle

Hardware

For stainless steel hinged dust covers only

S45-123

Plastic handle

Hardware

S30-071

Stainless steel handle

Hardware

Eyewash Ball Valves Only

S27-282

Brass ½" NPT stay-open ball valve only

S27-287

Stainless steel ½" NPT stay-open ball valve only

Sprayhead and Spray Ring Assemblies

S45-2453

Includes orange flow control

2.4 GPM (9 L/Min) flow control inside each head; total flow from both heads is 4.8 GPM (18 L/Min)

Eye/face wash sprayheads only

S45-2453

S39-394

Eyewash head assembly with supply stem

S39-394

S39-396

Eye/face wash sprayhead assembly with supply stem

S39-396

S39-681

Eye/face wash sprayhead assembly

Stem not included

S39-682

Eye/face wash assembly

For use with PVC unit only

Stem not included

S05-127

Spray ring only

Can only be added to Eyewash with cross-connection yoke

S39-397

Eyewash and spray ring assembly with supply stem

S39-397

Dust Caps

107-371

Dust caps only

Sold individually; two required per Eyewash

Approximately 1" (25 mm) x 1" (25 mm)

Yellow plastic tether

107-371

S53-063

Dual eye/face wash dust caps only

Sold individually; two required per Eyewash

2¼" (57 mm) x 1" (25 mm)

Beaded chain tether

S53-063

S53-310

Eyewash dust cap

Sold individually; two required per Eyewash

1" (25 mm) x 1" (25 mm)

Not for use with portable pressurized tank Eyewashes

S53-310

Bowls

154-058

10" (254 mm) diameter impact-resistant plastic Eyewash bowl

154-058

187-053

10¾" (273 mm)diameter stainless steel Eyewash bowl

187-053

Stem Spacers

113-1159

Stainless steel stem spacer

For use in fixtures with stainless steel bowl

113-1159

113-1185

Black plastic stem spacer

For use in fixtures with yellow plastic bowl

113-1185

Stem Assemblies

Eyewash Fixtures Only

S21-071 Brass

S21-072 SS304

S21-071

Eyewash with Spray Ring Fixtures Only

S21-073 Brass

S21-074 SS303

S21-075 SS316

113-1150

Brass stem only: for units with dual black eye/face heads

113-1151

Stainless steel stem only: for stainless steel units with dual black eye/face wash heads

Classic Stem Assemblies

Sprayhead Assembly	Galvanized Fixture with Plastic Bowl	Galvanized Fixture with Stainless Steel Bowl	Standard Stainless Steel Fixture	316 Stainless Steel Fixture
Eyewash Only	S21-071 113-1185	S21-071 113-1159	S21-072 113-1159	S21-075 113-1159
Eye/Face Wash with Spray Ring	S21-073 113-1185	S21-073 113-1159	S21-074 113-1159	None
Eye/Face Wash w/ Dual Black Heads	113-1150	113-1150	113-1151	None

Spacer 113-1159 or 113-1185 is required for units that shipped on or before 11/2/2005.

Assemblies include stem and appropriate flow control.

Stems S21-036 and S21-050 are obsolete.

Eyewash and Eye/Face Wash Flow Restrictors

125-167

3.7 GPM (14 L/Min) flow restrictor

Pink

For Eyewash with face spray ring

Stem not included

125-167

125-032

3.5 GPM (13 L/Min) flow restrictor

Black

For swing activated or swing-down units

Replacement Parts – Halo

187-320
Plastic bowl

187-320

S05-190
Sprayhead assembly

S05-190

S05-192
Sprayhead assembly

S05-192

S05-204
304 stainless steel sprayhead assembly

S05-204

S05-205
316 stainless steel sprayhead assembly

S08-390
Handle kit

S08-390

S27-327
Chrome-plated ½" ball valve

S27-327

S27-328
Stainless Steel ½" ball valve

S27-328

S45-2675
Eyewash cover kit

S45-2675

S45-2676
Eye/Face wash cover kit

S45-2676

S65-339
O-ring and screen

S65-339

S88-068
O-ring screen and flow control

S88-068

S90-388
Stainless steel bowl cover kit

S90-388

S90-390
Plastic bowl cover kit

S90-390

S90-391
Stainless steel bowl kit

S90-391

S90-392
Stainless steel bowl kit

316 stainless steel

Retrofit Classic Dust Covers

S45-1964

Compatible with any Bradley classic plastic Eyewash bowl

Fixture not included

S45-1964

S45-2396

For use with any Bradley classic Eyewash bowl

Includes welded stainless steel clam shell cover, stainless handle with teather and quick release pin

S45-2396

Drench Shower Handle for Standard Units

128-156A

25½" (648 mm) pull rod only

Standard pull rod shipped with non-barrier-free showers

128-156B

36" (914 mm) pull rod only

128-156A

Drench Shower Handle for Barrier-Free Units

128-156C

48" (1219 mm) pull rod only

128-156D

45½" (1156 mm) pull rod only

Standard pull rod shipped with barrier-free showers

128-156E

57" (1448 mm) pull rod only

128-156F

69" (1753 mm) pull rod only

128-156D

Drench Shower Handle for Heat Trace Units

128-156G

27" (686 mm) pull rod only

SpinTec Showerhead Retrofit Kits

Universal retrofit kits include all items shown

S24-192

Ornamental plastic shroud with ring – showerhead nozzle not included

S24-192

S24-193

Ornamental stainless steel shroud with ring – showerhead nozzle not included

S24-193

S24-194

Showerhead nozzle and 90˚ elbow

S24-194

S24-195

Ornamental plastic shroud with ring, showerhead nozzle and 90˚ elbow

S24-195

S24-196

Ornamental stainless steel shroud with ring, showerhead nozzle and 90˚ elbow

S24-196

S24-200

304 Stainless steel showerhead and 90˚ elbow

S24-200

S24-202

In-ceiling recessed showerhead assembly, with 5⅞" (149 mm) white steel shroud, includes 90˚ elbow

S24-202

154-147

Ring only

154-147

Drench Shower Ball Valve

S27-276

Stainless steel 1" (25 mm) ball valve only

S27-278

Chrome-plated brass 1" (25 mm) ball valve only

S30-059

Chrome-plated brass 1" (25 mm) ball valve with lever

S30-059

S30-061

Stainless steel 1" (25 mm) ball valve with lever

Self-Closing Ball Valve

S19-0011

Note: Self-closing ball valves are not ANSI/ISEA Z358.1 compliant. Appendix B3. However, an exception may be made in a "school laboratory situation." Contact local authorities regarding specific application.

Drench Hose Replacement Part Valves

S39-817

Replacement valve with drench hose sprayhead

S39-817

Hoses

S89-002

8' (2.4 m) yellow thermoplastic hose

S89-003

6' (1.8 m) stainless steel hose

S89-002 & S89-003

269-053

12' (3.7 m) yellow thermoplastic hose

Recoiling

269-054

25' (7.6 m) yellow thermoplastic hose

Recoiling

Hose Guide Bracket

140-226

Drench hose guide bracket

For deck-mounted applications

140-226

Hose Spray Valve

S27-265

Replacement valve only

Back-flow prevention

S27-303

Dual check valve, Series 7

S27-303

S45-2309

Dual check vacuum breaker, Series 9

S45-2309

S45-2310

Dual check vacuum breaker with intermediate atmospheric vent, Series 9D

S45-2310

Safety Signs

114-050

Drench shower sign

114-050

114-051

Eyewash sign

114-051

114-052

Combination shower and Eyewash sign

114-052

114-050E

International safety drench shower sign

114-050E

114-051E

International safety Eyewash sign

114-051E

114-052E

International safety combination drench shower and Eyewash sign

114-052E

On-Site Water Eyewash Kit

S19-949

Replacement cap

Nine liners

Inspection tag

S19-949

On-Site Foam Liner

269-1379

Perforated foam liner

Sold individually

Gravity Fed Tank

133-140

Seven gallon tank

133-140

Miscellaneous Supplies

269-964

Safety yellow touch-up paint

12-oz. aerosol

269-964

204-421

Inspection tag

Sold individually

204-421

269-1444

Eyewash test gauge

269-1444

Foot Treadle Kits

S39-395

Includes all necessary fittings for attaching to wall-mounted Eyewashes for hand or foot operation

S39-395

S45-572

Includes all necessary fittings for attaching to Bradley pedestal-mounted Eyewashes and combination showers for hand or foot operation

S45-572

S45-620

Same as S45-572, except designed for S19-310PVC shower only

S45-1314SS

Stainless steel type 316 foot treadle that includes all necessary type 304 fittings for attaching to Bradley pedestal-mounted Eyewashes and combination showers/Eyewashes for hand or foot operation

S45-1314SS16

Stainless steel type 316 foot treadle that includes all necessary type 316 fittings for attaching to Bradley pedestal-mounted Eyewashes and combination showers/Eyewashes for hand or foot operation

Optional Adapters

153-395

Female, 13/16" (21 mm) x 24–Chrome

153-396

Male, 3/8" (10 mm) NPSM–Chrome

153-401

Female, 3/4" Garden Hose–Chrome

Standard Specifications
Halo S19214, S19224 & S19314 Series

Eyewash Bowl

14" (356 mm) corner to corner, yellow impact-resistant plastic, Type 304 corrosion-resistant stainless steel or Type 316 corrosion-resistant stainless steel

Sprayhead Assembly

All sprayhead assemblies include flow control to assure safe, steady water flow under varying water supply conditions (up to 90 PSI) and flip-top protective spray covers

Halo Eyewash

- ABS plastic soft-flow sprayheads designed to gently cleanse the eyes
- Exceeds minimum water flow: 0.4 GPM (1.5 L/Min) at 30 psi (207 kPa)
- Flip-open dust covers that open automatically when unit is activated
- Self-draining design eliminates standing water

Halo Eye/Face Wash

- ABS plastic soft-flow sprayheads designed to gently cleanse the eyes and face
- Exceeds minimum water flow: 3.0 GPM (11 L/Min) at 30 psi (207 kPa)
- Flip-open dust covers that open automatically when unit is activated
- Self-draining design eliminates standing water

SpinTec Showerhead

- 3.1" (79 mm) diameter
- Uniform distribution of water
- Integral flow control provides a minimum of 20 GPM (76 L/Min)

ANSI Compliance

Unless otherwise indicated, all units comply with the ANSI/ISEA Z358.1 standard

Eyewash Valve

½" stay-open eye and eye/face wash valve manufactured of the following materials and supplied with either type 304 or 316 stainless steel handle that can be activated from both the left and right side of the unit

- Chrome-plated brass
- Type 316 stainless steel

Shower Valve

1" (25 mm) stay-open eye and eye/face wash valve manufactured of the following materials and supplied with either type 304 or 316 stainless steel pull rod

- Chrome-plated brass
- Type 316 stainless steel

Pipe and Fittings

- 1¼" piping assembly manufactured of one of the following materials
- Galvanized steel with BradTect safety yellow coating
- Type 304 corrosion-resistant stainless steel
- Type 316 corrosion-resistant stainless steel
- Chrome-plated red brass.

Water Supply

Wall-mounted and pedestal-mounted: ½" NPT female

Waste

Eyewash: 1¼" NPT female drain fitting

Transparent Plastic or Stainless Steel Dust Cover

- Protects entire bowl to keep contaminants, dust, and other debris from Eyewash area
- Dust cover opens when push handle is activated
- Constructed of transparent yellow impact-resistant plastic, type 304 corrosion-resistant stainless steel or type 316 corrosion-resistant stainless steel.

Additional Features

- **Eyewash mounting**
  Heavy-gauge aluminum with four clearance holes for wall mounting (hardware not included)
  All units are barrier free when mounted at the correct height
- Separate supply and waste, eliminates cross contamination risk
- Contains an antimicrobial agent to protect the sprayhead
- UL recognized to meet the ANSI/ISEA Z358.1 Standard

Standard Specifications
Classic Models
(exceptions noted)

Eyewash Bowl

10" (254 mm) diameter, yellow, impact-resistant plastic or corrosion-resistant stainless steel

Sprayhead Assembly

All sprayhead assemblies include flow control to assure safe, steady water flow under varying water supply conditions (up to 90 psi/621 kPa) and pop-off protective spray covers

- **Eyewash**
  Chrome-plated brass, soft-flow sprayheads designed to gently cleanse the eyes – stainless steel where specified
  Exceeds minimum water flow: 0.4 GPM (1.5 L/Min) at 30 psi (207 kPa)
- **Eye/Face Wash, Dual Sprayheads**
  Contains an antimicrobial agent to protect the sprayhead
  ABS plastic perforated disc sprayheads designed to gently cleanse the eyes and face
  Exceeds minimum water flow: 3.0 GPM (11 L/Min) at 30 psi (207 kPa)
- **Face Spray Ring**
  Chrome-plated, circular spray ring designed with a wider spray pattern for full face spray

SpinTec Showerhead

- Yellow, impact-resistant plastic or corrosion-resistant stainless steel
- 3.1" (79 m) diameter
- Uniform distribution of water
- Integral flow control provides a minimum of 20 GPM (76 L/Min)

Drench Hose

- 8' (2.4 m) yellow, reinforced thermoplastic hose (unless otherwise specified)
- 450 PSI burst strength
- Recoiling hose (where specified) retracts for storage while allowing easy extension in emergency situations

ANSI Compliance

Unless otherwise indicated, all units comply with the ANSI/ISEA Z358.1 standard

Drench Hose Series S19-430 through S19-630 Specifications

Drench Hose Valve

Chrome-plated valve with extended reinforced handle remains open once handle is squeezed.

- S19-630: Uses a ½" (13 mm) NPT chrome-plated brass, stay-open ball valve operated by a stainless steel push handle

Water Supply

Drench hoses: ⅜" (10 mm) NPT male thread with removable ½" NPT female reducing coupling

Series S19-921 On-Site® Gravity-Fed Eyewashes

On-Site Gravity-Fed Eyewash

Can be mounted on a wall or deck. Stainless steel bracket included for wall mounting. Molded handle design for easy transportability. Should be placed in a fixed location when completely assembled and filled with fluid.

- Seven-gallon fill capacity
- Easy to clean, refill, and check solution
- Meets 15-minute minimum flushing requirement at 0.4 GPM
- Transparent yellow, polycarbonate tank – visual reminder when it is time to clean or refill the tank
- Blow-molded design prevents leakage
- Opaque yellow, polypropylene pedestal with hinged Eyewash tray
- Eyewash tray pulls down in one quick motion – water flow is activated
  by this motion
- Removable tank is inverted onto the pedestal, piercing a liner
- Weighs 23 lbs (10 kg) when empty and 60 lbs (27 kg) filled

On-Site Waste Cart

Utilized with the Gravity-Fed Eyewash product.

- High-visibility yellow, polyethylene with 56 gal (212 L) capacity
- Captures used fluid from unit
- Tapered sump allows for easy drainage

Gravity-Fed Heater Jacket

- 121-watt heater enclosed in an insulated jacket
- Secondary thermostat with warning light and manual reset button helps prevent overheating in case of primary thermostat failure
- Requires 120-volt AC line
- All UL-listed components

Drench Shower Series S19-110 thru S19-130 and Combination Units Series S19-310 Shower Specifications

Shower Valve

1" (25 mm) NPT chrome-plated brass, stay-open ball valve operated by a stainless steel pull rod with triangular handle.

- Barrier-free pull rod extends to 48" from floor
- S19-130F and S19-120G Cord operated with self-closing ball valve Not compliant with ANSI/ISEA Z358.1

Pipe and Fittings

Standard: Galvanized steel pipe protected with BradTect yellow coating (unless otherwise specified).

- Vertical/horizontal shower: 1" (25 mm) pipe
- Freestanding shower, combination units: 1¼" pipe
- PVC combination shower: 2" (51 mm) Schedule 80

Water Supply

- Vertical/horizontal shower: 1" (25 mm) NPT female
- Freestanding shower, combination and barrier-free units: 1¼" NPT female

Drench Showers Series S19-120HFP; Eyewash Series S19-220HFP; Combination 310TW Frost-Proof Units

Eyewash Bowl/Sprayhead/Showerhead

See standard specifications

Through Wall Units

- Standard option is 8–12" (203–305 mm) wall thickness
- 0–8" (0–203 mm) and 12-18" offered as special orders

Valve

1" (25 mm) NPT chrome-plated brass, stay-open ball valve is hand operated by a stainless steel handle

Pipe and Fittings

1¼" galvanized steel pipe protected by BradTect yellow coating (unless otherwise specified)

Water Supply

- ½" (13 mm) NPT female (model S19-220HFP)
- 1" (25 mm) NPT female (model S19-120HFP)
- 1¼" (32 mm) NPT female (all other models)

Eyewash Series S19-200 thru S19-270JC; Combination Units Series S19-310 Plumbed Eyewash Specifications

Eyewash Valve

½" NPT chrome-plated brass, stay-open ball valve operated by a high-visibility yellow PVC or stainless steel (where specified) push handle.

- **Faucet-mounted unit**
  Activates when water is turned on at faucet and activator pin on Eyewash is pulled toward user
  Applied water pressure keeps activator pin open
  Faucet will maintain normal operation for hand washing, etc. when activator pin is closed
- **Swing-activated units (where indicated):**
  The swinging motion of the unit operates Eyewash valve – no additional handle is required

Pipe and Fittings

Standard: Galvanized steel pipe protected with BradTect yellow coating (unless otherwise specified); laboratory and swing-activated units are primarily chrome-plated brass.

- Wall-mounted Eyewash, laboratory Eyewash: ½" pipe
- Pedestal Eyewash: 1¼" pipe

Water Supply

- Wall-mounted, pedestal-mounted, swing-activated Eyewash ½" NPT female
- Laboratory: ½" NPT (unless otherwise specified)

Waste

Eyewash: Dome-type strainer and 1¼" NPT female drain fitting with tailpiece (P-trap to conform to local codes by others unless otherwise specified)

Hinged Stainless Steel Dust Cover

- Protects entire bowl to keep contaminants, dust, and other debris from Eyewash area
- Dust cover springs open when push handle is activated

Additional Features

- **Eyewash wall bracket**
  Heavy-gauge aluminum with three clearance holes for wall mounting (hardware not included)
  Barrier-free unit is stainless steel with four clearance holes for wall mounting
- **S19-220BF stainless steel, wrap-around skirt**:
  10" diameter corrosion-resistant stainless steel
  Conceals plumbing – unit extends 20" from wall

Series S19-304 Heat Traced Showers

Showerhead/Sprayheads

See standard specifications

Shower Valve

1" (25mm) NPT chrome-plated brass, or 316 stainless steel, stay-open valve is operated by a stainless steel pull rod with triangular handle

Eyewash Valve

½" NPT chrome-plated brass, or 316 stainless steel, stay-open valve hand operated by a stainless steel handle

Pipe and Fittings

1¼" galvanized steel, 304 stainless steel, or 316 stainless steel.

Electric Heat Trace Cable*

- Wraps around pipe, cable is self-regulated to 50˚F (10˚C) to protect against overheating and cold spots
- Thermal rating: 5 watts/foot
- Service voltage: 120-volt AC or 240-volt AC
- Amperage/wattage: .7 amp/80 watts at 50˚F (10˚C) unit water temperature

Pipe Insulation

- ¾" polyethylene closed cell encases pipe and heat trace cable
- Vertical semi-split allows insulation to be easily removed and re-assembled

Protective Outer Shell

- UV-stabilized ABS plastic
- Six easy-to-remove sections
- Designed for quick repairs and maintenance
- Sealed with rivets for added weather protection
- Resists chemical and other harsh environments

Freeze Protection Valve

- Continual flow of water when internal temperatures drop below 35˚F (2˚C)
- Valve closes at 45˚F (7˚C)
- Max pressure rating of 200 psi (1379 kPa)

Thermostat*

Opens at 64˚F (18˚C) and closes at 54˚F (12˚C)

Junction Box

General area junction box is plastic with one extra ¾" conduit hole. Hazardous location junction boxes are aluminum with multiple hubs. Accepts ¾" IPS conduit.

Water Supply

- 1¾" (44 mm) NPT male top or bottom supply

* Standard specification components are rated for General Area, Class 1 Division 2 Groups B, C, and D, Class 1 Division 1 Groups C and D, and Class II Division 1 and 2 Groups E, F, C and G. All units are CSA listed.

Series S19-670 thru S19-788 Pressurized Stainless Steel Eyewash Tanks

Eyewash Sprayhead/Drench Hose

- See standard specifications
- Available in 5 gal (19 L), 10 gal (39 L) and 15 gal (57 L) capacities. Built-in carrying handles and resilient bottom. Tire filler valve with 0-160 PSI (0- 1100 kPa) air gauge. Pressure relief valve prevents accidental over pressurization.

NOTE: Do not exceed 130 PSI tank pressurization.

Portable Heated Units

- Secondary thermostat with manual reset button helps prevent overheating in case of primary thermostat failure
- Plugs into any 120-volt AC line
- All UL listed components.
- 10 gal (39 L) and 15 gal (57 L) units provide 15 minutes of tempered water flow from Eyewash
- GFCI recommended

Halo vs. Classic Cross Reference Model Numbers

Product	Classic Model No.	New Halo No.
Pedestal-Mounted Eyewashes		
Eyewash, plastic bowl	S19-210	S19214EW
Eyewash, stainless steel bowl	S19-210B	S19214B
Pedestal-Mounted Eyewashes with Hinged Dust Cover		
Eyewash, plastic bowl w/ dust cover	N/A	S19214PDC
Eyewash, stainless steel bowl & hinged dust cover	S19-210DC	S19214DC
Pedestal-mounted Eye/Face Washes		
Eye/face wash, plastic bowl	S19-210FW	S19214FW
Eye/face wash, stainless steel bowl	S19-210Y	S19214Y
Eye/face wash, stainless steel bowl w/spray ring & 8' (2.4 m) hand-held drench hose	S19-210P	S19214P
Eye/face wash, stainless steel bowl, hand/foot operated	S19-210YF	S19214YF
Barrier-Free, Pedestal-Mounted Eye/Face Washes		
Eye/face wash, barrier-free, stainless steel bowl	S19-210BF	S19214Y
Pedestal-Mounted Eye/Face Washes with Hinged Dust Cover		
Eye/face wash, plastic bowl w/ dust cover	N/A	S19214PDCFW
Eye/face wash, stainless steel bowl & hinged dust cover	S19-210DCFW	S19214DCFW
Chrome-Plated Brass Finish Pedestal-Mounted Eyewashes		
Eyewash, chrome-plated brass piping & stainless steel bowl	S19-210U	
All Stainless Steel Pedestal-Mounted Eyewashes and Eye/Face Washes		
Eyewash, all stainless steel, corrosion-resistant	S19-210BSS	S19214BSS
Eyewash, all stainless steel with hinged dust cover	S19-210SC	S19214SC
Eye/face wash w/spray ring; all stainless steel, corrosion-resistant, hand/foot operated	S19-210SS	S19214SS
Wall-Mounted Eyewashes		
Eyewash, plastic bowl	S19-220	S19224EW
Eyewash, plastic bowl, w/tailpiece & P-trap	S19-220PT	S19224PT
Eyewash, stainless steel bowl	S19-220B	S19224B
Eyewash, stainless steel bowl, with tailpiece & P-trap	S19-220BPT	S19224BPT
Wall-Mounted Eyewashes with Hinged Dust Cover		
Eyewash, plastic bowl w/ dust cover	N/A	S19224PDC
Eyewash, stainless steel bowl & hinged dust cover	S19-220DC	S19224DC
Eyewash, stainless steel bowl & hinged dust cover, w/tailpiece & P-trap	S19-220DCPT	S19224DCPT
Wall-Mounted Eye/Face Washes		
Eye/face wash, plastic bowl	S19-220FW	S19224FW
Eye/face wash, plastic bowl, w/tailpiece & P-trap	S19-220FWPT	S19224FWPT
Eye/face wash, stainless steel bowl	S19-220T	S19224T
Eye/face wash w/spray ring, stainless steel bowl, 8' (2.4 m) hand-held drench hose	S19-220P	S19224P
Eye/face wash, stainless steel bowl, w/tailpiece & P-trap	S19-220TPT	S19224TPT
Eye/face wash w/spray ring, stainless steel bowl, hand/foot operated	S19-220Y	S19224Y
Wall-Mounted Eye/Face Washes with Hinged Dust Cover		
Eye/face wash, plastic bowl w/ dust cover	N/A	S19224PDCFW
Eye/face wash, stainless steel bowl & hinged dust cover	S19-220DCFW	S19224DCFW
Eye/face wash, stainless steel bowl & hinged dust cover, w/spray ring	S19-220DCR	S19224DCFW
Eye/face wash, stainless steel bowl & hinged dust cover, w/spray ring, tailpiece & P-trap	S19-220DCRPT	S19224DCRPT

Product	Classic Model No.	New Halo No.
Barrier-Free, Wall-Mounted Eyewashes		
Eyewash, barrier-free, plastic bowl (no wrap-around skirt)	S19-220ABF	N/A
Eyewash, barrier-free, stainless steel bowl (no wrap-around skirt)	S19-220BBF	N/A
Barrier-Free, Wall-Mounted Eye/Face Wash with Wrap-Around Skirt		
Eye/face wash w/spray ring, barrier-free, stainless steel bowl & wrap-around skirt	S19-220BF	N/A
All Stainless Steel Wall-Mounted Eyewashes and Eye/Face Washes		
Eyewash, all stainless steel, w/hinged dust cover	S19-220SC	S19224SC
Eye/face wash w/spray ring, all stainless steel	S19-220SS	S19224SS
Eye/face wash, all stainless steel except ABS plastic sprayheads	S19-220TSS	
Combination Drench Showers and Eyewash Units		
Eyewash; plastic showerhead & bowl	S19-310	S19314EW
Eyewash; plastic showerhead & bowl w/hose spray	S19-310P	S19314P
Eyewash; plastic showerhead, stainless steel bowl	S19-310SB	S19314SB
Eyewash; stainless steel bowl, hand/foot operated Eyewash, plastic showerhead	S19-310LL	S19314LL
Eyewash; stainless steel bowl & showerhead	S19-310F	S19314F
Eyewash; stainless steel showerhead & bowl, hand/foot operated Eyewash	S19-310UU	S19314UU
Combination Drench Showers and Eyewash Units with Hinged Dust Cover		
Eyewash; plastic showerhead & bowl w/ dust cover	N/A	S19314PDC
Eyewash; stainless steel bowl & hinged dust cover, plastic showerhead	S19-310DC	S19314DC
Combination Drench Showers and Eye/Face Wash Units		
Eye/face wash; plastic bowl & showerhead	S19-310FW	S19314FW
Eye/face wash; stainless steel bowl, plastic showerhead	S19-310SBFW	S19314SBFW
Eye/face wash; stainless steel bowl, plastic showerhead, hand/foot operated	S19-310AC	S19314AC
Eye/face wash; stainless steel showerhead & bowl	S19-310TT	S19314TT
Eye/face wash w/spray ring; stainless steel showerhead & bowl; hand/foot operated	S19-310SPR	S19314SPR
Eye/face wash w/spray ring; barrier-free, plastic bowl, plastic showerhead	S19-310BFPB	S19314BFPB
Eye/face wash w/spray ring; barrier-free, stainless steel bowl, plastic showerhead	S19-310BF	S19314BF
Combination Drench Showers and Eye/Face Wash Units with Hinged Dust Cover		
Eye/face wash; plastic showerhead & bowl w/ dust cover	N/A	S19314PDCFW
Eye/face wash; stainless steel bowl & hinged dust cover, plastic showerhead	S19-310DCFW	S19314DCFW
Eye/face wash; barrier-free, stainless steel bowl & hinged dust cover, plastic showerhead	S19-310DCBF	S19314DCBF
Combination Drench Showers and Eye/Face Wash Unit without Eyewash Bowl		
Eye/face wash; plastic showerhead (no bowl)	S19-310GG	S19314GG
All Stainless Steel Combination Drench Showers and Eyewash Units or Eye/Face Wash Units		
Eye/face wash w/spray ring, barrier-free, all stainless steel	S19-310BFSS	S19-314BFSS
Eyewash; all stainless steel, corrosion-resistant	S19-310FSS	S19-314FSS
Eyewash; chrome-plated red brass pipe & fittings, stainless steel bowl & showerhead	S19-310JJ	
Eyewash; all stainless steel w/hinged dust cover	S19-310SC	S19314SC
Eye/face wash w/spray ring; type 304 all stainless steel, hand/foot operated	S19-310SS	S19314SS
Eyewash; type 316 all stainless steel, hand/foot operated	S19-310SS16	S19314SS16

Halo S19214 & S19224 Series Certification Reference

Halo Model No.	Description	UL certified to ANSI/ISEA	IAPMO Oceana certified to AS4775 & AS4020
Eyewashes			
S19214EW	Halo Eyewash, plastic bowl	•	
S19214EWZ	Halo Eyewash, plastic bowl		
S19214EWZS	Halo Eyewash, plastic bowl		•
S19214B	Halo Eyewash, stainless steel bowl	•	
S19214BZ	Halo Eyewash, stainless steel bowl		
S19214BZS	Halo Eyewash, stainless steel bowl		•
S19224EW	Halo Eyewash, plastic bowl	•	
S19224EWZ	Halo Eyewash, plastic bowl		
S19224EWZS	Halo Eyewash, plastic bowl		•
S19224PT	Halo Eyewash, plastic bowl, p-trap	•	
S19224PTZ	Halo Eyewash, plastic bowl, p-trap		
S19224PTZS	Halo Eyewash, plastic bowl, p-trap		
S19224B	Halo Eyewash, stainless steel bowl	•	
S19224BZ	Halo Eyewash, stainless steel bowl		
S19224BZS	Halo Eyewash, stainless steel bowl		•
S19224BPT	Halo Eyewash, stainless steel bowl, p-trap	•	
S19224BPTZ	Halo Eyewash, stainless steel bowl, p-trap		
S19224BPTZS	Halo Eyewash, stainless steel bowl, p-trap		
Eyewashes with Dust Cover			
S19214PDC	Halo Eyewash, plastic bowl w/ dust cover	•	
S19214PDCZ	Halo Eyewash, plastic bowl w/ dust cover		
S19214PDCZS	Halo Eyewash, plastic bowl w/ dust cover		•
S19214DC	Halo Eyewash, stainless steel bowl & hinged dust cover	•	
S19214DCZ	Halo Eyewash, stainless steel bowl & hinged dust cover		
S19214DCZS	Halo Eyewash, stainless steel bowl & hinged dust cover		•
S19224PDC	Halo Eyewash, plastic bowl w/ dust cover	•	
S19224PDCZ	Halo Eyewash, plastic bowl w/ dust cover		
S19224PDCZS	Halo Eyewash, plastic bowl w/ dust cover		•
S19224DC	Halo Eyewash, stainless steel bowl & hinged dust cover	•	
S19224DCZ	Halo Eyewash, stainless steel bowl & hinged dust cover		
S19224DCZS	Halo Eyewash, stainless steel bowl & hinged dust cover		•
S19224DCPT	Halo Eyewash, stainless steel bowl & hinged dust cover, p-trap	•	
S19224DCPTZ	Halo Eyewash, stainless steel bowl & hinged dust cover, p-trap		
S19224DCPTZS	Halo Eyewash, stainless steel bowl & hinged dust cover, p-trap		
Eye-Face Washes			
S19214FW	Halo Eye/face wash, plastic bowl	•	
S19214FWZ	Halo Eye/face wash, plastic bowl		
S19214FWZS	Halo Eye/face wash, plastic bowl		•
S19214P	Halo Eye/face wash, stainless steel bowl w/ hose spray	•	
S19214PZ	Halo Eye/face wash, stainless steel bowl w/ hose spray		
S19214Y	Halo Eye/face wash, stainless steel bowl	•	
S19214YZ	Halo Eye/face wash, stainless steel bowl		
S19214YZS	Halo Eye/face wash, stainless steel bowl		•
S19214YF	Halo Eye/face wash, stainless steel bowl, hand/foot operated	•	
S19214YFZ	Halo Eye/face wash, stainless steel bowl, hand/foot operated		

Halo Model No.	Description	UL certified to ANSI/ISEA	IAPMO Oceana certified to AS4775 & AS4020
Eye-Face Washes			
S19214YFZS	Halo Eye/face wash, stainless steel bowl,hand/foot operated		•
S19224FW	Halo Eye/face wash, plastic bowl	•	
S19224FWZ	Halo Eye/face wash, plastic bowl		
S19224FWZS	Halo Eye/face wash, plastic bowl		•
S19224FWPT	Halo Eye/face wash, plastic bowl, p-trap	•	
S19224FWPTZ	Halo Eye/face wash, plastic bowl, p-trap		
S19224FWPTZS	Halo Eye/face wash, plastic bowl, p-trap		
S19224T	Halo Eye/face wash, stainless steel bowl	•	
S19224TZ	Halo Eye/face wash, stainless steel bowl		
S19224TZS	Halo Eye/face wash, stainless steel bowl		•
S19224P	Halo Eye/face wash, stainless steel bowl w/ hose spray, tailpiece	•	
S19224PZ	Halo Eye/face wash, stainless steel bowl w/ hose spray, tailpiece		
S19224TPT	Halo Eye/face wash, stainless steel bowl, p-trap	•	
S19224TPTZ	Halo Eye/face wash, stainless steel bowl, p-trap		
S19224TPTZS	Halo Eye/face wash, stainless steel bowl, p-trap		
S19224Y	Halo Eye/face wash, stainless steel bowl,hand/foot operated, tailpiece	•	
S19224YZ	Halo Eye/face wash, stainless steel bowl,hand/foot operated, tailpiece		
S19224YZS	Halo Eye/face wash, stainless steel bowl,hand/foot operated, tailpiece		•
Eye-Face Washes with Dust covers			
S19214PDCFW	Halo Eye/face wash, plastic bowl w/ dust cover	•	
S19214PDCFWZ	Halo Eye/face wash, plastic bowl w/ dust cover		
S19214PDCFWZS	Halo Eye/face wash, plastic bowl w/ dust cover		•
S19214DCFW	Halo Eye/face wash, stainless steel bowl & hinged dust cover	•	
S19214DCFWZ	Halo Eye/face wash, stainless steel bowl & hinged dust cover		
S19214DCFWZS	Halo Eye/face wash, stainless steel bowl & hinged dust cover		•
S19224PDCFW	Halo Eye/face wash, plastic bowl w/ dust cover	•	
S19224PDCFWZ	Halo Eye/face wash, plastic bowl w/ dust cover		
S19224PDCFWZS	Halo Eye/face wash, plastic bowl w/ dust cover		•
S19224DCFW	Halo Eye/face wash, stainless steel bowl & hinged dust cover	•	
S19224DCFWZ	Halo Eye/face wash, stainless steel bowl & hinged dust cover		
S19224DCFWZS	Halo Eye/face wash, stainless steel bowl & hinged dust cover		•
S19224DCRPT	Halo Eye/face wash, stainless steel bowl & hinged dust cover, p-trap	•	
S19224DCRPTZ	Halo Eye/face wash, stainless steel bowl & hinged dust cover, p-trap		
S19224DCRPTZS	Halo Eye/face wash, stainless steel bowl & hinged dust cover, p-trap		
All Stainless Steel Eye/Face Wash			
S19214BSS	Halo stainless steel eye/face wash and bowl	•	
S19214BSSZ	Halo stainless steel eye/face wash and bowl		•
S19214SC	Halo stainless steel eye/face wash, bowl and cover	•	
S19214SCZ	Halo stainless steel eye/face wash, bowl and cover		•
S19214SS	Halo stainless steel eye/face wash and bowl with foot activation	•	
S19214SSZ	Halo stainless steel eye/face wash and bowl with foot activation		•
S19224SC	Halo stainless steel eye/face wash, bowl and cover	•	
S19224SCZ	Halo stainless steel eye/face wash, bowl and cover		•
S19224SS	Halo stainless steel eye/face wash and bowl	•	
S19224SSZ	Halo stainless steel eye/face wash and bowl		•

Halo S19314 Series Certification Reference

Halo Model No.	Description	UL certified to ANSI/ISEA	IAPMO Oceana certified to AS4775 & AS4020
Eyewashes			
S19314EW	Halo Eyewash, plastic showerhead & bowl	•	
S19314EWZ	Halo Eyewash, plastic showerhead & bowl		
S19314EWZS	Halo Eyewash, plastic showerhead & bowl		•
S19314P	Halo Eyewash, plastic showerhead & bowl w/ hose spray	•	
S19314PZ	Halo Eyewash, platic showerhead & bowl w/ hose spray		
S19314SB	Halo Eyewash, plastic showerhead, stainless steel bowl	•	
S19314SBZ	Halo Eyewash, plastic showerhead, stainless steel bowl		
S19314SBZS	Halo Eyewash, plastic showerhead, stainless steel bowl		•
S19314LL	Halo Eyewash, plastic showerhead, stainless steel bowl, hand/foot activated	•	
S19314LLZ	Halo Eyewash, plastic showerhead, stainless steel bowl, hand/foot activated		
S19314LLZS	Halo Eyewash, plastic showerhead, stainless steel bowl, hand/foot activated		•
S19314F	Halo Eyewash, plastic showerhead w/ stainless steel shroud & bowl	•	
S19314FZ	Halo Eyewash, plastic showerhead w/ stainless steel shroud & bowl		
S19314FZS	Halo Eyewash, plastic showerhead w/ stainless steel shroud & bowl		•
S19314UU	Halo Eyewash, plastic showerhead w/ stainless steel shroud & bowl, hand/foot operated Eyewash	•	
S19314UUZ	Halo Eyewash, plastic showerhead w/ stainless steel shroud & bowl, hand/foot operated Eyewash		
S19314UUZS	Halo Eyewash, plastic showerhead w/ stainless steel shroud & bowl, hand/foot operated Eyewash		•
Eyewashes with Dust Cover			
S19314PDC	Halo Eyewash, plastic showerhead & bowl w/ dust cover	•	
S19314PDCZ	Halo Eyewash, plastic showerhead & bowl w/ dust cover		
S19314PDCZS	Halo Eyewash, plastic showerhead & bowl w/ dust cover		•
S19314DC	Halo Eyewash, plastic showerhead, stainless steel bowl & hinged dust cover	•	
S19314DCZ	Halo Eyewash, plastic showerhead, stainless steel bowl & hinged dust cover		
S19314DCZS	Halo Eyewash, plastic showerhead, stainless steel bowl & hinged dust cover		•
Eye-Face Washes			
S19314FW	Halo Eye/face wash, plastic showerhead & bowl	•	
S19314FWZ	Halo Eye/face wash, plastic showerhead & bowl		
S19314FWZS	Halo Eye/face wash, plastic showerhead & bowl		•
S19314SBFW	Halo Eye/face wash, plastic showerhead, stainless steel bowl	•	
S19314SBFWZ	Halo Eye/face wash, plastic showerhead, stainless steel bowl		
S19314SBFWZS	Halo Eye/face wash, plastic showerhead, stainless steel bowl		•
S19314AC	Halo Eye/face wash, plastic showerhead, stainless steel bowl, hand/foot operated Eyewash	•	
S19314ACZ	Halo Eye/face wash, plastic showerhead, stainless steel bowl, hand/foot operated Eyewash		
S19314ACZS	Halo Eye/face wash, plastic showerhead, stainless steel bowl, hand/foot operated Eyewash		•
S19314TT	Halo Eye/face wash, plastic showerhead w/ stainless steel shroud & bowl	•	

Halo Model No.	Description	UL certified to ANSI/ISEA	IAPMO Oceana certified to AS4775 & AS4020
Eye-Face Washes			
S19314TTZ	Halo Eye/face wash, plastic showerhead w/ stainless steel shroud & bowl		
S19314TTZS	Halo Eye/face wash, plastic showerhead w/ stainless steel shroud & bowl		•
S19314SPR	Halo Eye/face wash, stainless steel showerhead & bowl, hand/foot operated Eyewash	•	
S19314SPRZ	Halo Eye/face wash, stainless steel showerhead & bowl, hand/foot operated Eyewash		
S19314SPRZS	Halo Eye/face wash, stainless steel showerhead & bowl, hand/foot operated Eyewash		•
S19314BFPB	Halo Eye/face wash, barrier-free, plastic showerhead & bowl	•	
S19314BFPBZ	Halo Eye/face wash, barrier-free, plastic showerhead & bowl		
S19314BFPBZS	Halo Eye/face wash, barrier-free, plastic showerhead & bowl		•
S19314BF	Halo Eye/face wash, barrier-free, plastic showerhead, stainless steel bowl	•	
S19314BFZ	Halo Eye/face wash, barrier-free, plastic showerhead, stainless steel bowl		
S19314BFZS	Halo Eye/face wash, barrier-free, plastic showerhead, stainless steel bowl		•
Eye-Face Washes with Dust covers			
S19314PDCFW	Halo Eye/face wash, plastic showerhead & bowl w/ dust cover	•	
S19314PDCFWZ	Halo Eye/face wash, plastic showerhead & bowl w/ dust cover		
S19314PDCFWZS	Halo Eye/face wash, plastic showerhead & bowl w/ dust cover		•
S19314DCFW	Halo Eye/face wash, plastic showerhead, stainless steel bowl & hinged dust cover	•	
S19314DCFWZ	Halo Eye/face wash, plastic showerhead, stainless steel bowl & hinged dust cover		
S19314DCFWZS	Halo Eye/face wash, plastic showerhead, stainless steel bowl & hinged dust cover		•
S19314DCBF	Halo Eye/face wash, barrier-free, plastic showerhead, stainless steel bowl w/ dust cover	•	
S19314DCBFZ	Halo Eye/face wash, barrier-free, plastic showerhead, stainless steel bowl w/ dust cover		
S19314DCBFZS	Halo Eye/face wash, barrier-free, plastic showerhead, stainless steel bowl w/ dust cover		•
Eye-Face Washes without Eyewash Bowl			
S19314GG	Halo Eye/face wash, plastic showerhead, no bowl	•	
S19314GGZ	Halo Eye/face wash, plastic showerhead, no bowl		
S19314GGZS	Halo Eye/face wash, plastic showerhead, no bowl		•
All Stainless Steel Eye/Face Wash			
S19314BFSS	Halo stainless steel eye/face wash and showerhead, barrier free	•	
S19314BFSSZ	Halo stainless steel eye/face wash and showerhead, barrier free		•
S19314FSS	Halo stainless steel eye/face wash and showerhead	•	
S19314FSSZ	Halo stainless steel eye/face wash and showerhead		•
S19314SC	Halo stainless steel eye/face wash and bowl, cover and showerhead	•	
S19314SCZ	Halo stainless steel eye/face wash and bowl, cover and showerhead		•
S19314SS	Halo stainless steel eye/face wash and showerhead with foot activation	•	
S19314SSZ	Halo stainless steel eye/face wash and showerhead with foot activation		•
S19314SS16	Halo 316 stainless steel eye/face wash and showerhead with foot activation	•	
S19314SS16Z	Halo 316 stainless steel eye/face wash and showerhead with foot activation		•

Numerical Index

MODEL NO.	PG
Fixtures	
Keltech CLE Series	53
Keltech SNA Series	53
Keltech S19361	53
Keltech S19361HF	53
S19-110	10
S19-110BF	10
S19-110BFSS	10
S19-110BFSSZ	10
S19-110SS	10
S19-110SSZ	10
S19-120	12
S19-120A	12
S19-120ABF	13
S19-120BF	13
S19-120FM	13
S19-120FMBF	13
S19-120G	12
S19-120HFP	12
S19-120P	12
S19-120SS	12
S19-120SSZ	12
S19-120SSBF	13
S19-120SSBFZ	13
S19-120T	12
S19-125BF	74
S19-125FMBF	74
S19-125SBF	74
S19-125SFMBF	74
S19-130	13
S19-130A	13
S19-130ABF	14
S19-130BF	14
S19-130F	14
S19-130SS	13
S19-130SSZ	13
S19-130SSBF	14
S19-130SSBFZ	14
S19-2000	55
S19-2000EFX	55
S19-200B	68
S19-2100	55
S19214BSS	20
S19214BSSZ	20
S19214B	17

MODEL NO.	PG
S19214BZ	17
S19214BZS	17
S19214DC	18
S19214DCZ	18
S19214DCZS	18
S19214DCFW	19
S19214DCFWZ	19
S19214DCFWZS	20
S19214EW	17
S19214EWZ	17
S19214EWZS	17
S19214FW	18
S19214FWZ	18
S19214FWZS	18
S19214P	19
S19214PZ	19
S19214PDC	17
S19214PDCZ	17
S19214PDCZS	17
S19214PDCFW	19
S19214PDCFWZ	19
S19214PDCFWZS	19
S19214SC	20
S19214SCZ	20
S19214SS	20
S19214SSZ	20
S19214Y	18
S19214YZ	18
S19214YZS	18
S19214YF	18
S19214YFZ	19
S19214YFZS	19
S19-2150	55
S19-2200	55
S19-220BF	29
S19-220HFP	29
S19224B	24
S19224BZ	24
S19224BZS	24
S19224BPT	25
S19224BPTZ	25
S19224BPTZS	25
S19224DC	25
S19224DCZ	25
S19224DCZS	25

MODEL NO.	PG
S19224DCFW	28
S19224DCFWZ	28
S19224DCFWZS	28
S19224DCPT	26
S19224DCPTZ	26
S19224DCPTZS	26
S19224DCRPT	28
S19224DCRPTZ	28
S19224DCRPTZS	29
S19224EW	24
S19224EWZ	24
S19224EWZS	24
S19224FW	26
S19224FWZ	26
S19224FWZS	26
S19224FWPT	26
S19224FWPTZ	26
S19224FWPTZS	26
S19224P	27
S19224PZ	27
S19224PDC	25
S19224PDCZ	25
S19224PDCZS	25
S19224PDCFW	28
S19224PDCFWZ	28
S19224PDCFWZS	28
S19224PT	24
S19224PTZ	24
S19224PTZS	24
S19224SC	29
S19224SCZ	29
S19224SS	29
S19224SSZ	29
S19224T	26
S19224TZ	27
S19224TZS	27
S19224TPT	27
S19224TPTZ	27
S19224TPTZS	27
S19224Y	27
S19224YZ	27
S19224YZS	28
S19-2250	55
S19-2300	55
S19-2350	55

MODEL NO.	PG
S19-240	68
S19-240FW	68
S19-260	68
S19-270B	68
S19-270BL	68
S19-270C	71
S19-270E	72
S19-270HD	71
S19-270HW	71
S19-270JD	72
S19-270JW	72
S19274C	71
S19274E	72
S19274HD	71
S19274HDR	71
S19274HDB	71
S19274HW	71
S19274HWB	71
S19274JD	72
S19274JDB	72
S19274JW	72
S19274JWB	72
S19-280D	71
S19-280W	71
S19284H	75
S19284HB	75
S19284J	75
S19284JB	75
S19-290D	72
S19-290W	72
S19294HB	76
S19294HBT	76
S19294JB	76
S19294JBT	76
S19-304D2B	47
S19-304D2BL	47
S19-304D2T	47
S19-304D2TL	47
S19-304GAB	47
S19-304GABL	47
S19-304GAT	47
S19-304GATL	47
S19-310PVC	43
S19-310TW	42
S19314AC	37

MODEL NO.	PG
S19314ACZ	37
S19314ACZS	38
S19314BF	39
S19314BFZ	39
S19314BFZS	40
S19314BFPB	39
S19314BFPBZ	39
S19314BFPBZS	39
S19314BFSS	42
S19314BFSSZ	42
S19314DC	36
S19314DCZ	36
S19314DCZS	36
S19314DCBF	41
S19314DCBFZ	41
S19314DCBFZS	41
S19314DCFW	40
S19314DCFWZ	40
S19314DCFWZS	40
S19314EW	34
S19314EWZ	34
S19314EWZS	34
S19314F	35
S19314FZ	35
S19314FZS	35
S19314FW	36
S19314FWZ	37
S19314FWZS	37
S19314FSS	42
S19314FSSZ	42
S19314GG	41
S19314GGZ	41
S19314GGZS	41
S19314LL	35
S19314LLZ	35
S19314LLZS	35
S19314P	34
S19314PZ	34
S19314PDC	36
S19314PDCZ	36
S19314PDCZS	36
S19314PDCFW	40
S19314PDCFWZ	40
S19314PDCFWZS	40
S19314SB	34

MODEL NO.	PG
S19314SBZ	34
S19314SBZS	34
S19314SBFW	37
S19314SBFWZ	37
S19314SBFWZS	37
S19314SC	42
S19314SCZ	42
S19314SPR	38
S19314SPRZ	38
S19314SPRZS	39
S19314SS	43
S19314SSZ	43
S19314SS16	43
S19314SS16Z	43
S19314TT	38
S19314TTZ	38
S19314TTZS	38
S19314UU	35
S19314UUZ	35
S19314UUZS	36
S19-319B2	59
S19-319B4	59
S19-319S2	59
S19-319S4	59
S19-322D	57
S19-322E	57
S19-323D	57
S19-323E	57
S19-324D	58
S19-324E	58
S19-324DG	58
S19-324EG	58
S19-324DGW	58
S19-324EGW	58
S19-324D2D	58
S19-324D1D	58
S19345HFB	77
S19345HFBT	77
S19345HXB	77
S19345HXBT	77
S19345JFB	77
S19345JFBT	77
S19345JXB	77
S19345JXBT	77
S19372	50

MODEL NO.	PG
S19374	50
S19378	50
S19382	50
S19384	50
S19387	50
S19388	50
S19-399	81
S19-430A	65
S19-430D	65
S19-430EH	65
S19-430SH	65
S1944011ABC	66
S1944011BBC	66
S1944011CBC	66
S1944011CBD	66
S1944022ABC	66
S19-460	65
S19-460EFW	65
S19-465	65
S19-465EFW	65
S19-670	83
S19-671	83
S19-671H	83
S19-672	83
S19-690	83
S19-690H	83
S19-690LHS	83
S19-788	83
S19-788H	83
S19-788LHS	83
S19-921	81
S19-921H	81
S19-921HR	81
S19-949	81
Accessories	
S19-322D	85
S19-322E	85
S19-323D	85
S19-323E	85
S19-324D	85
S19-324D1D	86
S19-324D2D	86
S19-324DG	85
S19-324DGW	85
S19-324E	85

MODEL NO.	PG
S19-324EG	86
S19-32EGW	86
S19-330	84
S19-330ST	84
S19-399	84
S19-430EH	84
S19-430SH	84
S19-671HR	84
S19-690A	84
S19-690HR	84
S19-788HR	84
S19-921HR	84
S45-1964	91
S45-2396	91
Replacement Parts	
107-371	88
113-1150	89
113-1151	89
113-1159	89
113-1185	89
114-050	94
114-050E	94
114-051	94
114-051E	94
114-052	94
114-052E	94
125-032	89
125-167	89
128-135	87
128-156A	91
128-156B	91
128-156C	91
128-156D	91
128-156E	91
128-156F	91
128-156G	91
133-140	81, 94
140-226	66, 93
153-395	95
153-396	95
153-401	95
154-058	89
154-147	92
187-053	89
187-320	90

MODEL NO.	PG
204-421	94
269-053	92
269-054	92
269-1379	81, 94
269-1444	94
269-964	94
S05-127	88
S05-190	90
S05-192	90
S05-204	90
S05-205	90
S08-336	87
S08-338	87
S08-390	90
S19-0011	92
S19-949	94
S21-071	89
S21-072	89
S21-073	89
S21-074	89
S21-075	89
S24-192	92
S24-193	92
S24-194	92
S24-195	92
S24-196	92
S24-200	92
S24-202	92
S27-265	93
S27-276	92
S27-278	92
S27-282	88
S27-287	88
S27-303	66, 93
S27-327	90
S27-328	90
S30-059	92
S30-061	92
S30-070	87
S30-071	87
S30-072	87
S30-074	87
S30-075	87
S30-087	87
S39-394	88

MODEL NO.	PG
S39-395	95
S39-396	88
S39-397	88
S39-681	88
S39-682	88
S39-817	92
S45-122	87
S45-123	87
S45-1314SS	95
S45-1314SS16	95
S45-1986	86
S45-1987	86
S45-1989	86
S45-1990	86
S45-2309	66, 93
S45-2310	66, 93
S45-2453	88
S45-2675	90
S45-2676	90
S45-572	95
S45-620	95
S53-063	88
S53-310	88
S65-339	90
S88-068	90
S89-002	92
S89-003	92
S90-388	90
S90-390	90
S90-391	90
S90-392	90

Complimentary & Confidential Evaluation

We offer a confidential no-charge evaluation of your workspaces to assess your current situation and suggest a plan for your emergency equipment needs.

262 251 6000
800 BRADLEY bradleycorp.com
W142 N9101 Fountain Boulevard
Menomonee Falls, WI 53051 USA

3928-PDF only-0119